FOREWORD

This wiring diagram manual has been prepared to provide information on the electrical system of the 2002 PRIUS.

Applicable models: NHW11 Series

For service specifications and repair procedures of the above models other than those listed in this manual, refer to the following manuals;

Manual Name	Pub. No.
● 2002 PRIUS Repair Manual	
Volume 1	RM883U1
Volume 2	RM883U2
● 2002 TOYOTA New Car Features	NCF214U

All information in this manual is based on the latest product information at the time of publication. However, specifications and procedures are subject to change without notice.

TOYOTA MOTOR CORPORATION

CAUTION

When repairing the hybrid vehicle (HV), always follow the direction given in the repair manual listed above to prevent electrical shock, leakage or explosion.

NOTICE

When handling supplemental restraint system components (removal, installation or inspection, etc.), always follow the direction given in the repair manuals listed above to prevent accidents and supplemental restraint system malfunction.

A INTRODUCTION

This manual consists of the following 13 sections:

No.	Section	Description
A	INDEX	Index of the contents of this manual.
	INTRODUCTION	Brief explanation of each section.
B	HOW TO USE THIS MANUAL	Instructions on how to use this manual.
C	TROUBLE–SHOOTING	Describes the basic inspection procedures for electrical circuits.
D	ABBREVIATIONS	Defines the abbreviations used in this manual.
E	GLOSSARY OF TERMS AND SYMBOLS	Defines the symbols and functions of major parts.
F	RELAY LOCATIONS	Shows position of the Electronic Control Unit, Relays, Relay Block, etc. This section is closely related to the system circuit.
G	ELECTRICAL WIRING ROUTING	Describes position of Parts Connectors, Splice points, Ground points, etc. This section is closely related to the system circuit.
H	INDEX	Index of the system circuits.
	SYSTEM CIRCUITS	Electrical circuits of each system are shown from the power supply through ground points. Wiring connections and their positions are shown and classified by code according to the connection method. (Refer to the section, ”How to use this manual”). The ”System Outline” and ”Service Hints” useful for troubleshooting are also contained in this section.
I	GROUND POINT	Shows ground positions of all parts described in this manual.
J	POWER SOURCE (Current Flow Chart)	Describes power distribution from the power supply to various electrical loads.
K	CONNECTOR LIST	Describes the form of the connectors for the parts appeared in this book. This section is closely related to the system circuit.
L	PART NUMBER OF CONNECTORS	Indicates the part number of the connectors used in this manual.
M	OVERALL ELECTRICAL WIRING DIAGRAM	Provides circuit diagrams showing the circuit connections.

This manual provides information on the electrical circuits installed on vehicles by dividing them into a circuit for each system.

The actual wiring of each system circuit is shown from the point where the power source is received from the battery as far as each ground point. (All circuit diagrams are shown with the switches in the OFF position.)

When troubleshooting any problem, first understand the operation of the circuit where the problem was detected (see System Circuit section), the power source supplying power to that circuit (see Power Source section), and the ground points (see Ground Point section). See the System Outline to understand the circuit operation.

When the circuit operation is understood, begin troubleshooting of the problem circuit to isolate the cause. Use Relay Location and Electrical Wiring Routing sections to find each part, junction block and wiring harness connectors, wiring harness and wiring harness connectors, splice points, and ground points of each system circuit. Internal wiring for each junction block is also provided for better understanding of connection within a junction block.
Wiring related to each system is indicated in each system circuit by arrows (from__, to__). When overall connections are required, see the Overall Electrical Wiring Diagram at the end of this manual.

[A]

STOP LIGHT

* The system shown here is an EXAMPLE ONLY. It is different to the actual circuit shown in the SYSTEM CIRCUITS SECTION.

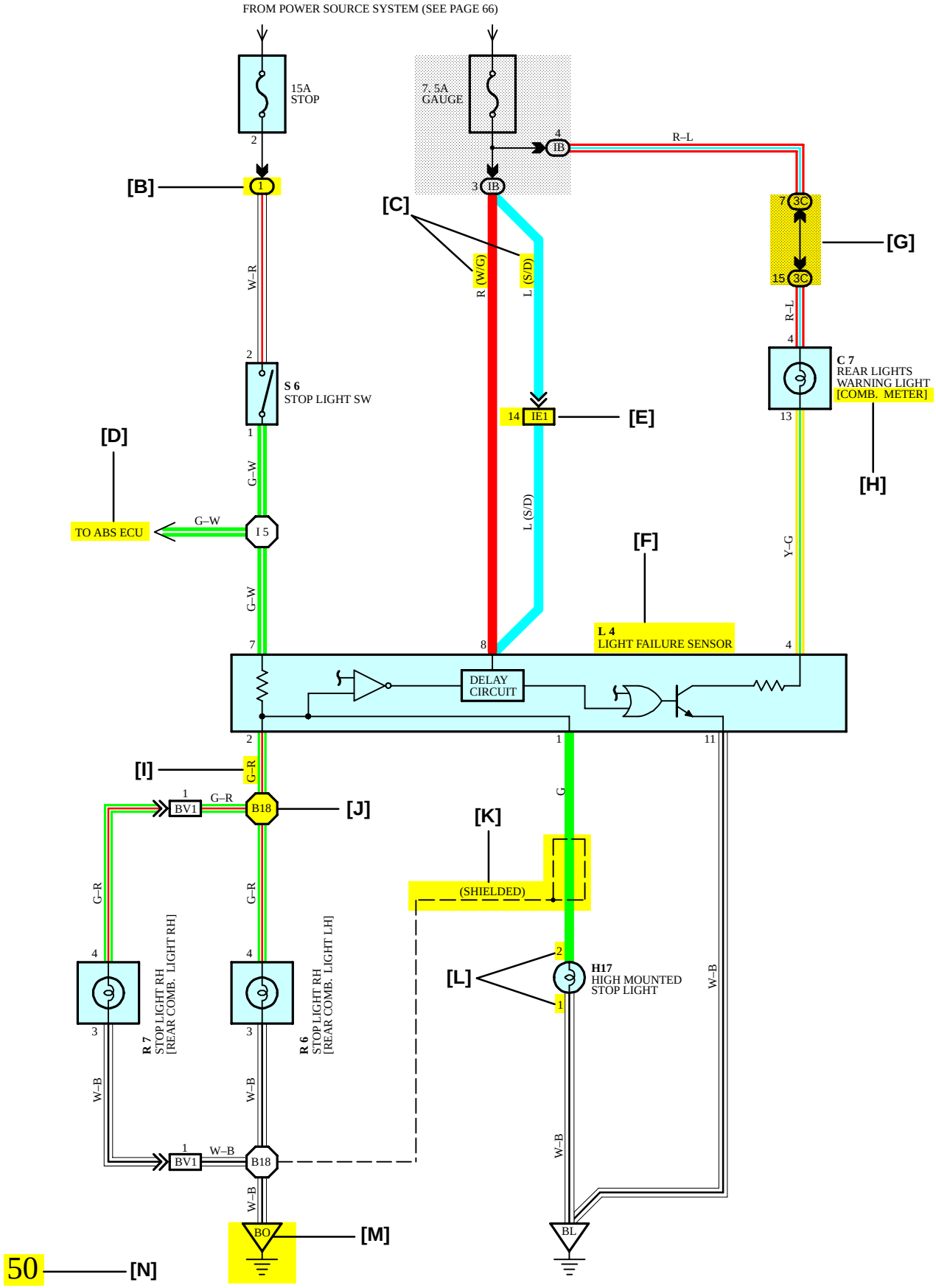

[A] : System Title

[B] : Indicates a Relay Block. No shading is used and only the Relay Block No. is shown to distinguish it from the J/B

Example: (1) Indicates Relay Block No.1

[C] : ( ) is used to indicate different wiring and connector, etc. when the vehicle model, engine type, or specification is different.

[D] : Indicates related system.

[E] : Indicates the wiring harness and wiring harness connector. The wiring harness with male terminal is shown with arrows (»).
Outside numerals are pin numbers.

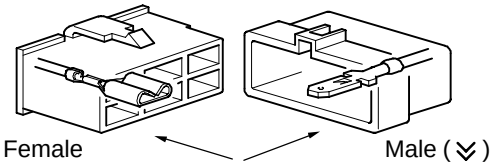

The first letter of the code for each wiring harness and wiring harness connector(s) indicates the component's location, e.g, "E" for the Engine Compartment, "I" for the Instrument Panel and Surrounding area, and "B" for the Body and Surrounding area.

When more than one code has the first and second letters in common, followed by numbers (e.g, IH1, IH2), this indicates the same type of wiring harness and wiring harness connector.

[F] : Represents a part (all parts are shown in sky blue). The code is the same as the code used in parts position.

[G] : Junction Block (The number in the circle is the J/B No. and the connector code is shown beside it). Junction Blocks are shaded to clearly separate them from other parts.

Example:

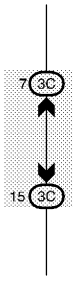

3C indicates that it is inside Junction Block No.3

[H] : When 2 parts both use one connector in common, the parts connector name used in the wire routing section is shown in square brackets [ ].

[I] : Indicates the wiring color.

Wire colors are indicated by an alphabetical code.

B	= Black	W	= White	BR	= Brown
L	= Blue	V	= Violet	SB	= Sky Blue
R	= Red	G	= Green	LG	= Light Green
P	= Pink	Y	= Yellow	GR	= Gray
O	= Orange				

The first letter indicates the basic wire color and the second letter indicates the color of the stripe.

Example: L – Y

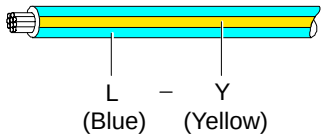

[J] : Indicates a wiring Splice Point (Codes are "E" for the Engine Room, "I" for the Instrument Panel, and "B" for the Body).

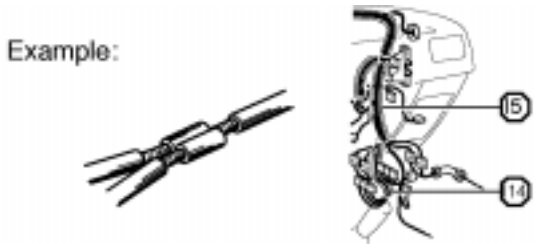

The Location of splice Point I 5 is indicated by the shaded section.

[K] : Indicates a shielded cable.

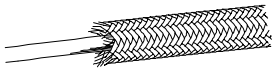

[L] : Indicates the pin number of the connector.
The numbering system is different for female and male connectors.

Example:

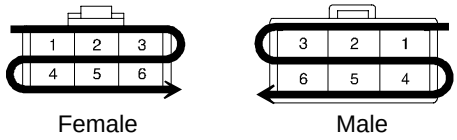

[M] : Indicates a ground point.

The first letter of the code for each ground point(s) indicates the component's location, e.g, "E" for the Engine Compartment, "I" for the Instrument Panel and Surrounding area, and "B" for the Body and Surrounding area.

[N] : Page No.

B HOW TO USE THIS MANUAL

[O] SYSTEM OUTLINE

Current is applied at all times through the STOP fuse to TERMINAL 2 of the stop light SW.
When the ignition SW is turned on, current flows from the GAUGE fuse to TERMINAL 8 of the light failure sensor, and also flows through the rear lights warning light to TERMINAL 4 of the light failure sensor.

STOP LIGHT DISCONNECTION WARNING

When the ignition SW is turned on and the brake pedal is pressed (Stop light SW on), if the stop light circuit is open, the current flowing from TERMINAL 7 of the light failure sensor to TERMINALS 1, 2 changes, so the light failure sensor detects the disconnection and the warning circuit of the light failure sensor is activated.
As a result, the current flows from TERMINAL 4 of the light failure sensor to TERMINAL 11 to GROUND and turns the rear lights warning light on. By pressing the brake pedal, the current flowing to TERMINAL 8 of the light failure sensor keeps the warning circuit on and holds the warning light on until the ignition SW is turned off.

[P] SERVICE HINTS

S6 STOP LIGHT SW

2–1 : Closed with the brake pedal depressed

L4 LIGHT FAILURE SENSOR

1, 2, 7–GROUND : Approx. **12** volts with the stop light SW on
4, 8–GROUND : Approx. **12** volts with the ignition SW at **ON** position
11–GROUND : Always continuity

[Q] : PARTS LOCATION

Code	See Page	Code	See Page	Code	See Page
C7	34	L4	36	R7	37
H17	36	R6	37	S6	35

[R] : RELAY BLOCKS

Code	See Page	Relay Blocks (Relay Block Location)
1	18	R/B No.1 (Instrument Panel Left)

[S] : JUNCTION BLOCK AND WIRE HARNESS CONNECTOR

Code	See Page	Junction Block and Wire Harness (Connector Location)
IB	20	Instrument Panel Wire and Instrument Panel J/B (Lower Finish Panel)
3C	22	Instrument Panel Wire and J/B No.3 (Instrument Panel Left Side)

[T] : CONNECTOR JOINING WIRE HARNESS AND WIRE HARNESS

Code	See Page	Joining Wire Harness and Wire Harness (Connector Location)
IE1	42	Floor Wire and Instrument Panel Wire (Left Kick Panel)
BV1	50	Luggage Room Wire and Floor Wire (Luggage Compartment Left)

[U] : GROUND POINTS

Code	See Page	Ground Points Location
BL	50	Under the Left Quarter Pillar
BO	50	Back Panel Center

[V] : SPLICE POINTS

Code	See Page	Wire Harness with Splice Points	Code	See Page	Wire Harness with Splice Points
I5	44	Cowl Wire	B18	50	Luggage Room Wire

[O] : Explains the system outline.

[P] : Indicates values or explains the function for reference during troubleshooting.

[Q] : Indicates the reference page showing the position on the vehicle of the parts in the system circuit.

Example : Part ”L4” (Light Failure Sensor) is on page 36 of the manual.
∗ The letter in the code is from the first letter of the part, and the number indicates its order in parts starting with that letter.

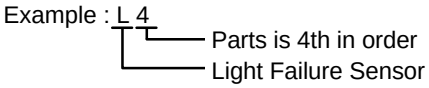

[R] : Indicates the reference page showing the position on the vehicle of Relay Block Connectors in the system circuit.

Example : Connector ”1” is described on page 18 of this manual and is installed on the left side of the instrument panel.

[S] : Indicates the reference page showing the position on the vehicle of J/B and Wire Harness in the system circuit.

Example : Connector ”3C” connects the Instrument Panel Wire and J/B No.3. It is described on page 22 of this manual, and is installed on the instrument panel left side.

[T] : Indicates the reference page describing the wiring harness and wiring harness connector (the female wiring harness is shown first, followed by the male wiring harness).

Example : Connector ”IE1” connects the floor wire (female) and Instrument panel wire (male). It is described on page 42 of this manual, and is installed on the left side kick panel.

[U] : Indicates the reference page showing the position of the ground points on the vehicle.

Example : Ground point ”BO” is described on page 50 of this manual and is installed on the back panel center.

[V] : Indicates the reference page showing the position of the splice points on the vehicle.

Example : Splice point ”I5” is on the Cowl Wire Harness and is described on page 44 of this manual.

B HOW TO USE THIS MANUAL

The ground points circuit diagram shows the connections from all major parts to the respective ground points. When troubleshooting a faulty ground point, checking the system circuits which use a common ground may help you identify the problem ground quickly. The relationship between ground points (EA, IB and IC shown below) can also be checked this way.

I GROUND POINT

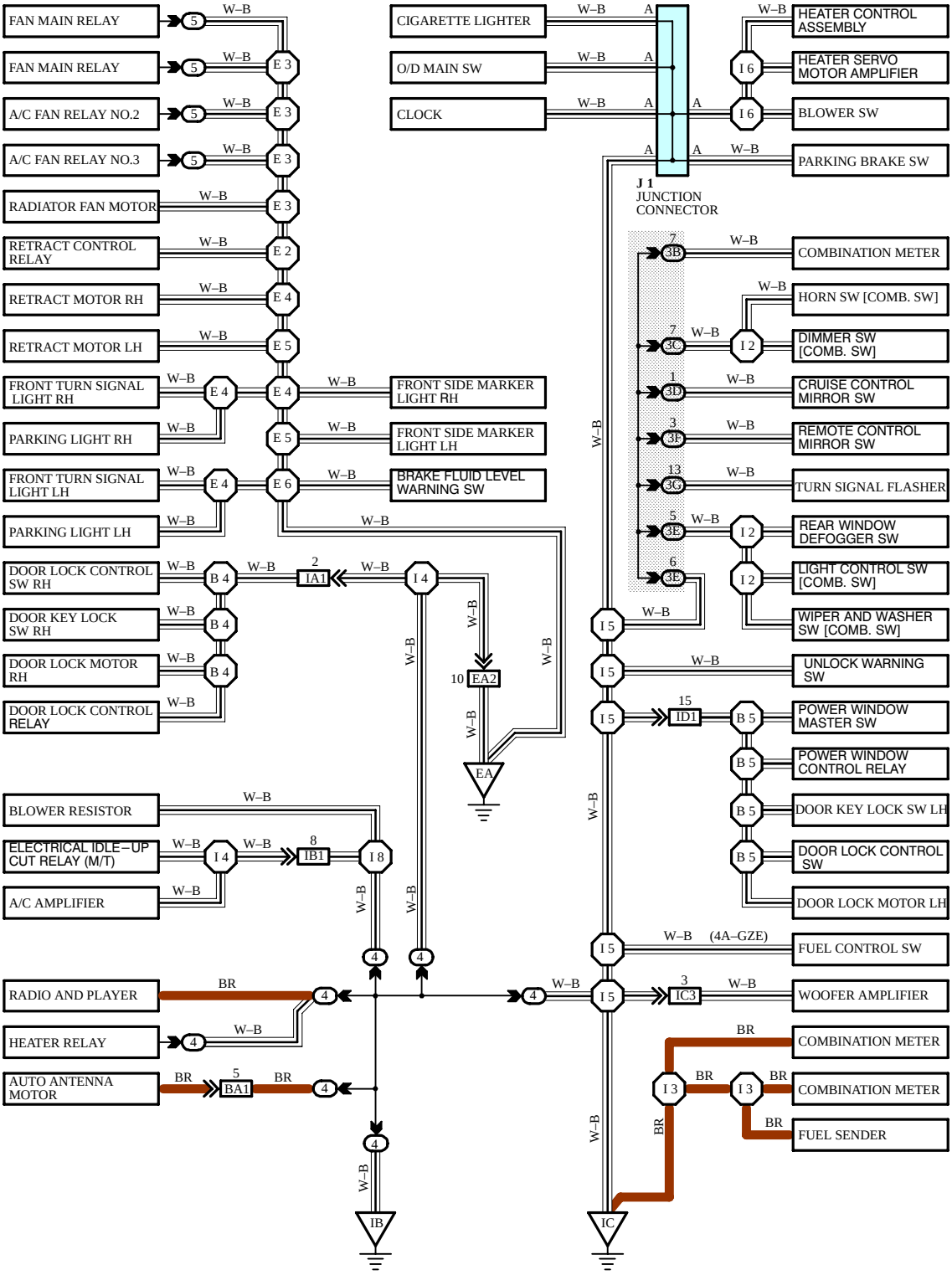

* The system shown here is an EXAMPLE ONLY. It is different to the actual circuit shown in the SYSTEM CIRCUITS SECTION.

The ”Current Flow Chart” section, describes which parts each power source (fuses, fusible links, and circuit breakers) transmits current to. In the Power Source circuit diagram, the conditions when battery power is supplied to each system are explained. Since all System Circuit diagrams start from the power source, the power source system must be fully understood.

J POWER SOURCE (Current Flow Chart)

The chart below shows the route by which current flows from the battery to each electrical source (Fusible Link, Circuit Breaker, Fuse, etc.) and other parts.

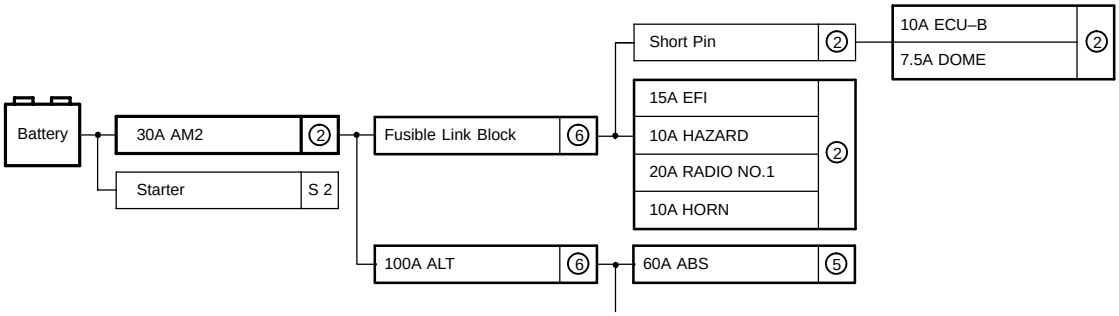

Engine Room R/B (See Page 20)

Fuse		System	Page
20A	STOP	ABS ABS and Traction Control Cruise Control Electronically Controlled Transmission and A/T Indicator Multiplex Communication System	194 187 180 166 210
10A	DOME	Cigarette Lighter and Clock Combination Meter Headlight Interior Light Key Reminder and Seat Belt Warning Light Auto Turn Off	214 230 112 122

POWER SOURCE

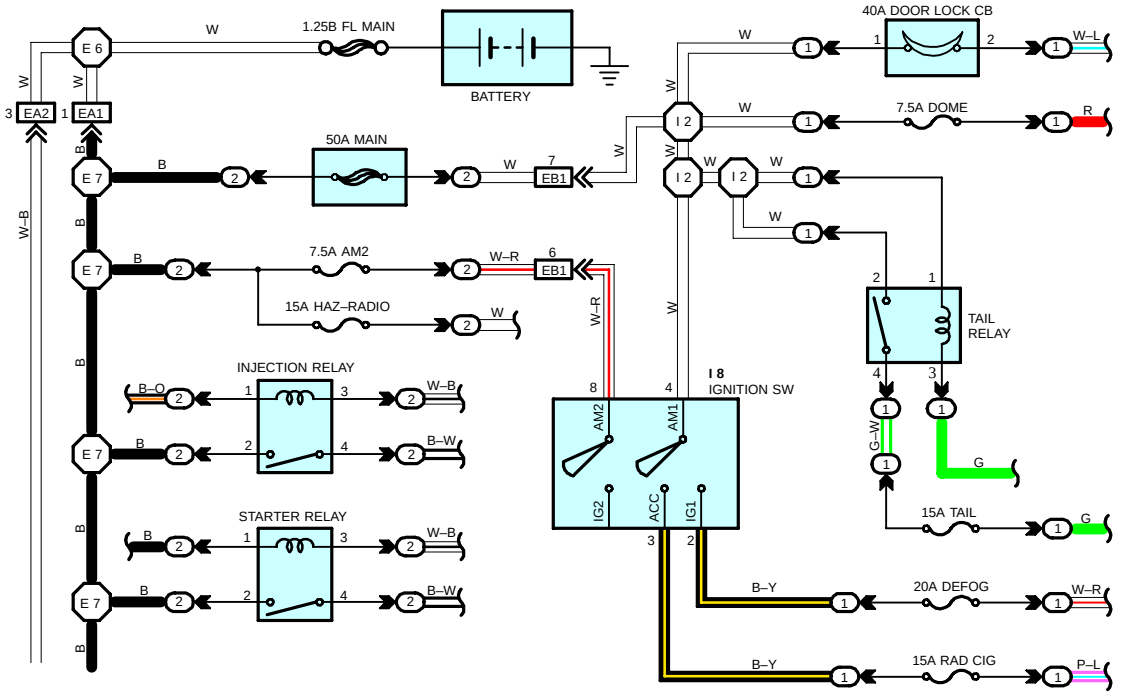

∗ The system shown here is an EXAMPLE ONLY. It is different to the actual circuit shown in the SYSTEM CIRCUITS SECTION.

K CONNECTOR LIST

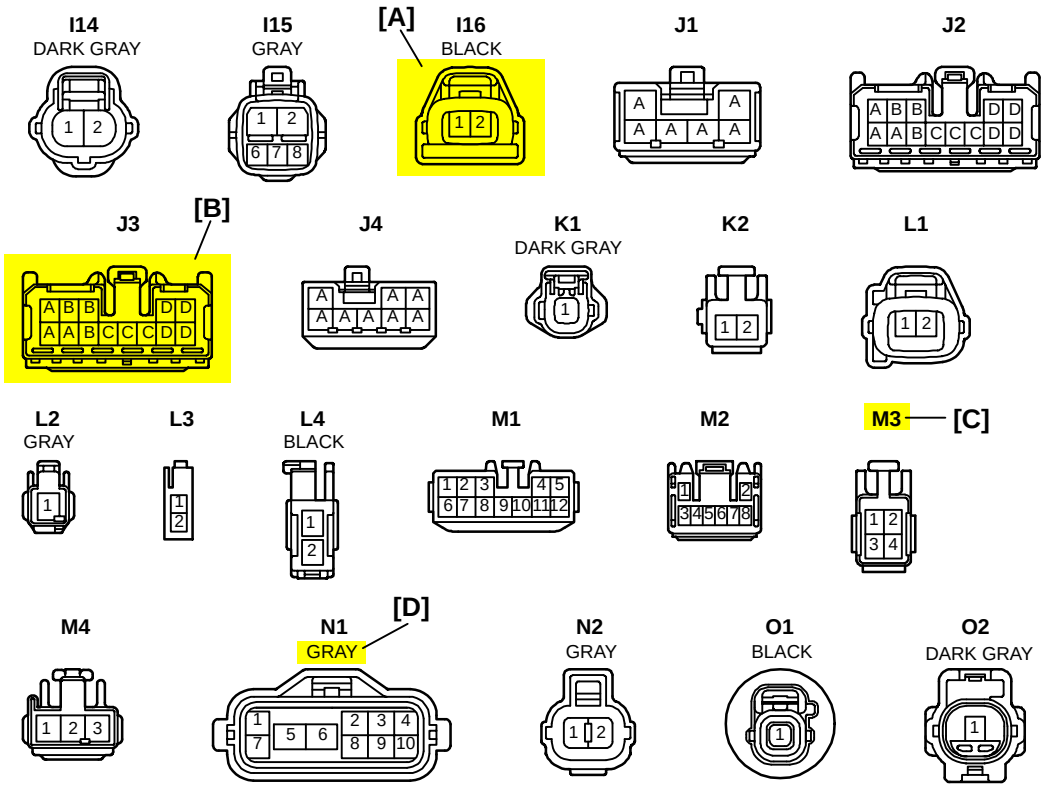

[A] : Indicates connector to be connected to a part. (The numeral indicates the pin No.)

[B] : Junction Connector
Indicates a connector which is connected to a short terminal.

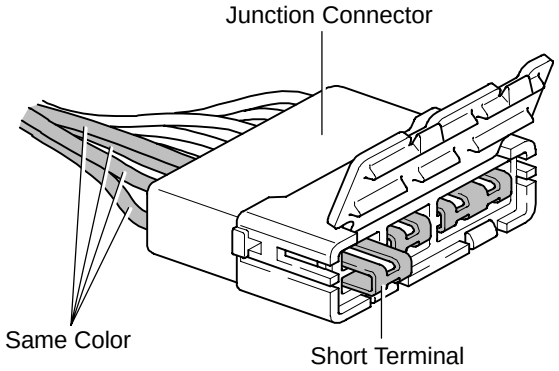

Junction connector in this manual include a short terminal which is connected to a number of wire harnesses. Always perform inspection with the short terminal installed. (When installing the wire harnesses, the harnesses can be connected to any position within the short terminal grouping. Accordingly, in other vehicles, the same position in the short terminal may be connected to a wire harness from a different part.)
Wire harness sharing the same short terminal grouping have the same color.

[C] : Parts Code
The first letter of the code is taken from the first letter of part, and the numbers indicates its order in parts which start with the same letter.

[D] : Connector Color
Connectors not indicated are milky white in color.

L PART NUMBER OF CONNECTORS

Code	Part Name	Part Number
A 1	A/C Ambient Temp. Sensor	90980–11070
A 2	A/C Condenser Fan Motor	90980–11237
A 3	A/C Condenser Fan Relay	90980–10940
A 4	A/C Triple Pressure SW (A/C Dual and Single Pressure SW)	90980–10943
[A]	A/T Oil Temp. Sensor [B]	909 [C] 413
A 6	ABS Actuator	90980–11151
A 7	ABS Actuator	90980–11009
A 8	ABS Speed Sensor Front LH	90980–10941
A 9	ABS Speed Sensor Front RH	90980–11002
A10	Airbag Sensor Front LH	90980–11856
A11	Airbag Sensor Front RH	
A12		90980–11194
		90980–11

Code	Part Name	Part Number
D 4	Diode (Door Courtesy Light)	90980–11608
D 5	Diode (Key Off Operation)	90980–10962
D 6	Diode (Luggage Compartment Light)	90980–11608
D 7	Door Lock Control Relay	90980–10848
D 8	Door Courtesy Light LH	90980–11148
D 9	Door Courtesy Light RH	
D10	Door Courtesy SW LH	90980–11097
D11	Door Courtesy SW RH	
D12	Door Courtesy SW Front LH	90980–11156
D13	Door Courtesy SW Front RH	
D14	Door Courtesy SW Rear LH	
D15	Door Courtesy SW Rear RH	
D16	nd Unlock SW LH	90980–11170
	RH	

[A] : Part Code

[B] : Part Name

[C] : Part Number
Toyota Part Number are indicated.

Not all of the above part numbers of the connector are established for the supply. In case of ordering a connector or terminal with wire, please confirm in advance if there is supply for it using “Parts Catalog News” (published by Parts Engineering Administration Dept.).

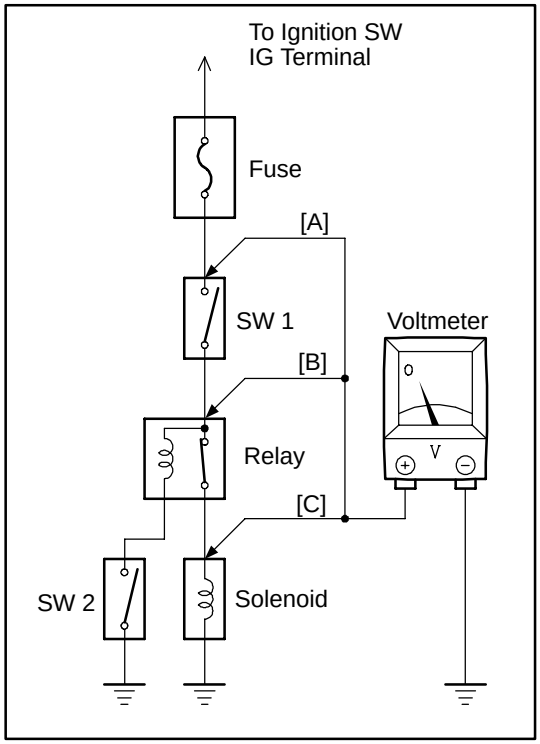

VOLTAGE CHECK

(a) Establish conditions in which voltage is present at the check point.

Example:
[A] – Ignition SW on
[B] – Ignition SW and SW 1 on
[C] – Ignition SW, SW 1 and Relay on (SW 2 off)

(b) Using a voltmeter, connect the negative lead to a good ground point or negative battery terminal, and the positive lead to the connector or component terminal.
This check can be done with a test light instead of a voltmeter.

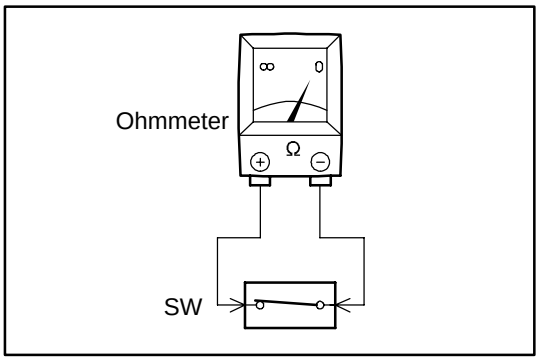

CONTINUITY AND RESISTANCE CHECK

(a) Disconnect the battery terminal or wire so there is no voltage between the check points.

(b) Contact the two leads of an ohmmeter to each of the check points.

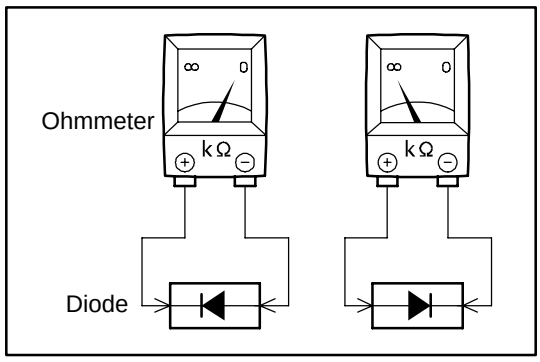

If the circuit has diodes, reverse the two leads and check again.
When contacting the negative lead to the diode positive side and the positive lead to the negative side, there should be continuity.
When contacting the two leads in reverse, there should be no continuity.

(c) Use a volt/ohmmeter with high impedance (10 kΩ/V minimum) for troubleshooting of the electrical circuit.

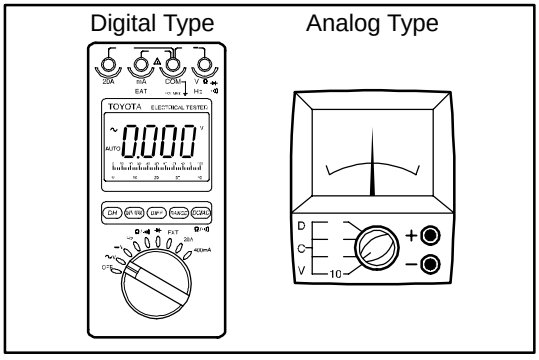

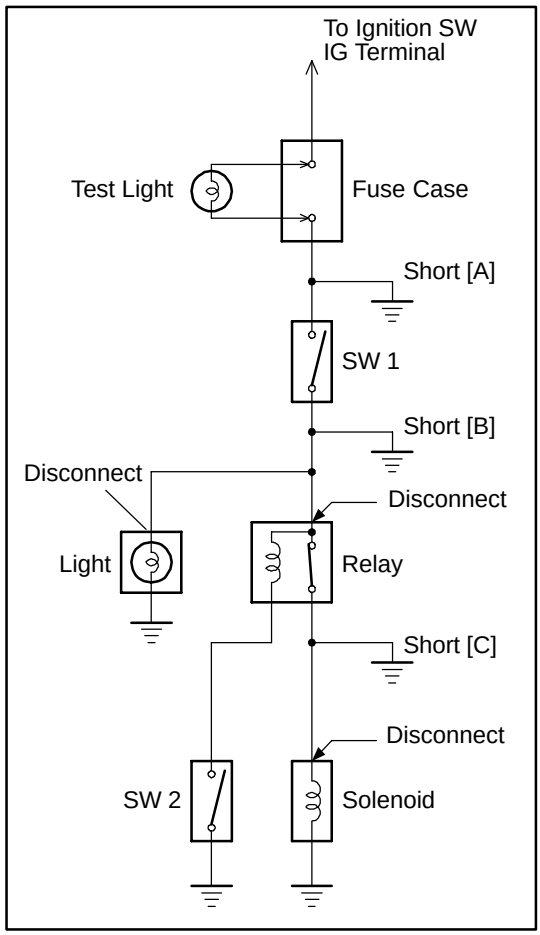

FINDING A SHORT CIRCUIT

(a) Remove the blown fuse and disconnect all loads of the fuse.

(b) Connect a test light in place of the fuse.

(c) Establish conditions in which the test light comes on.

Example:
[A] – Ignition SW on
[B] – Ignition SW and SW 1 on
[C] – Ignition SW, SW 1 and Relay on (Connect the Relay) and SW 2 off (or Disconnect SW 2)

(d) Disconnect and reconnect the connectors while watching the test light.
The short lies between the connector where the test light stays lit and the connector where the light goes out.

(e) Find the exact location of the short by lightly shaking the problem wire along the body.

CAUTION:

(a) Do not open the cover or the case of the ECU unless absolutely necessary. (If the IC terminals are touched, the IC may be destroyed by static electricity.)

(b) When replacing the internal mechanism (ECU part) of the digital meter, be careful that no part of your body or clothing comes in contact with the terminals of leads from the IC, etc. of the replacement part (spare part).

DISCONNECTION OF MALE AND FEMALE CONNECTORS

To pull apart the connectors, pull on the connector itself, not the wire harness.

HINT : Check to see what kind of connector you are disconnecting before pulling apart.

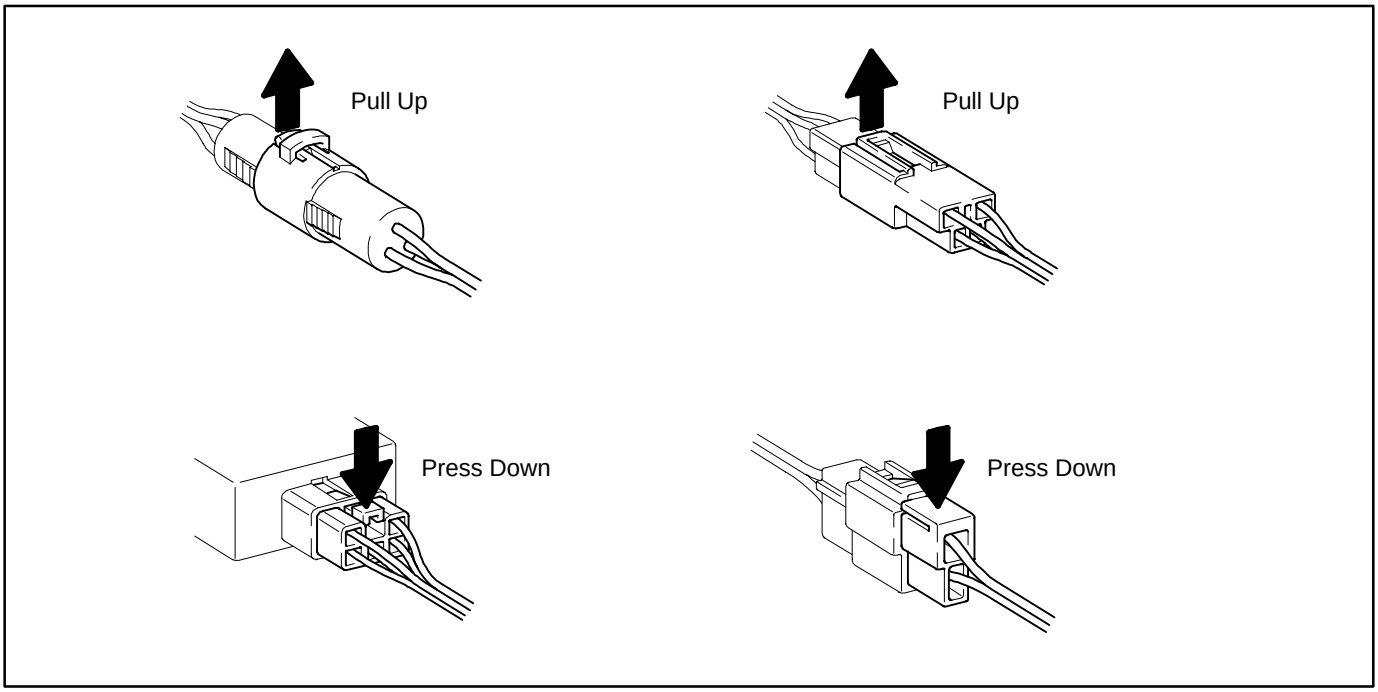

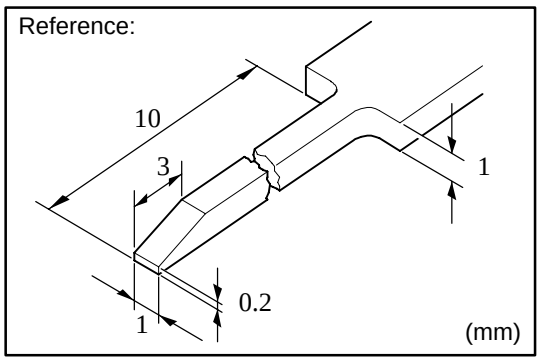

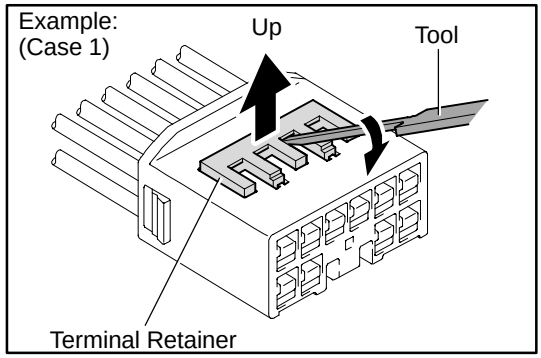

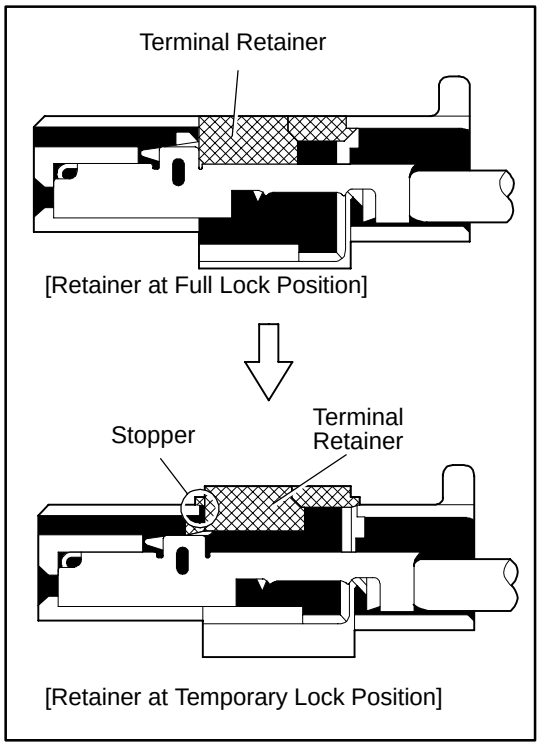

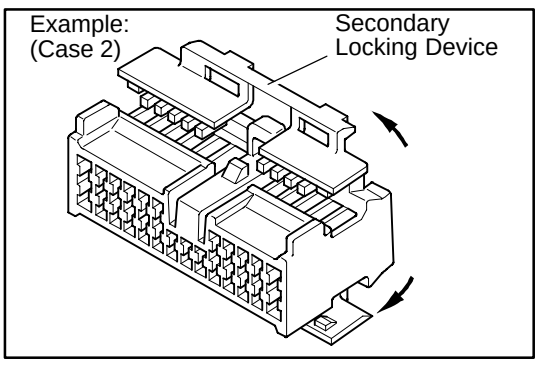

HOW TO REPLACE TERMINAL (with terminal retainer or secondary locking device)

1. PREPARE THE SPECIAL TOOL

   HINT : To remove the terminal from the connector, please construct and use the special tool or like object shown on the left.

2. DISCONNECT CONNECTOR

3. DISENGAGE THE SECONDARY LOCKING DEVICE OR TERMINAL RETAINER.

   (a) Locking device must be disengaged before the terminal locking clip can be released and the terminal removed from the connector.

   (b) Use a special tool or the terminal pick to unlock the secondary locking device or terminal retainer.

   NOTICE:
   Do not remove the terminal retainer from connector body.

   [A] For Non–Waterproof Type Connector

   HINT : The needle insertion position varies according to the connector's shape (number of terminals etc.), so check the position before inserting it.

   "Case 1"

   Raise the terminal retainer up to the temporary lock position.

   "Case 2"

   Open the secondary locking device.

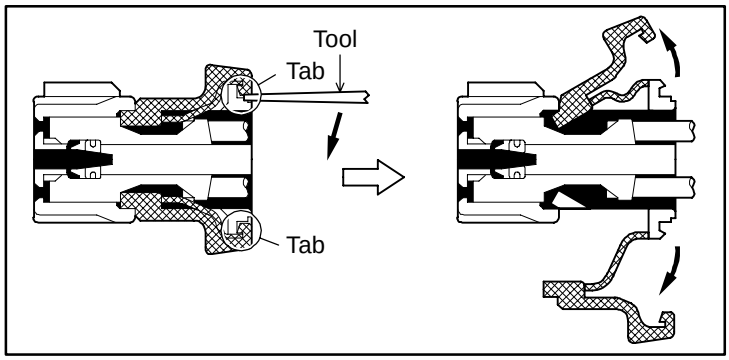

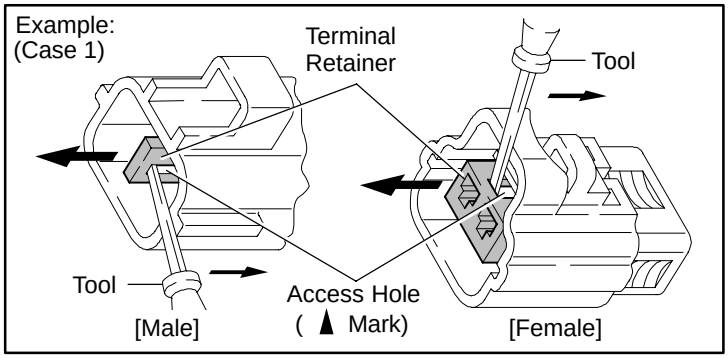

[B] For Waterproof Type Connector

HINT : Terminal retainer color is different according to connector body.

Example:

Terminal Retainer	: Connector Body
Black or White	: Gray
Black or White	: Dark Gray
Gray or White	: Black

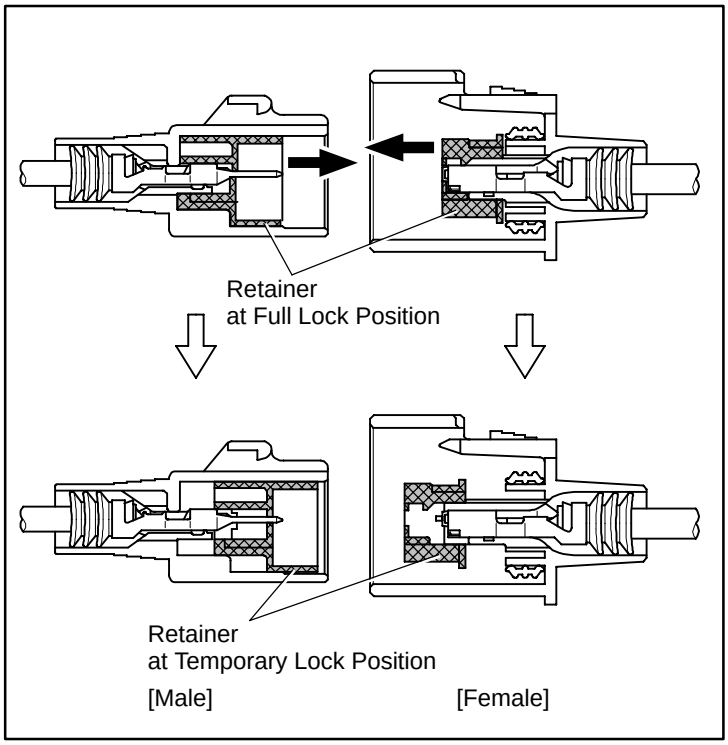

”Case 1”

Type where terminal retainer is pulled up to the temporary lock position (Pull Type).

Insert the special tool into the terminal retainer access hole (▲Mark) and pull the terminal retainer up to the temporary lock position.

HINT : The needle insertion position varies according to the connector’s shape (Number of terminals etc.), so check the position before inserting it.

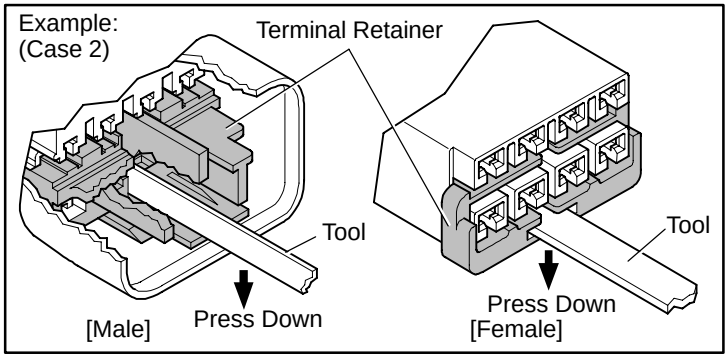

”Case 2”

Type which cannot be pulled as far as Power Lock insert the tool straight into the access hole of terminal retainer as shown.

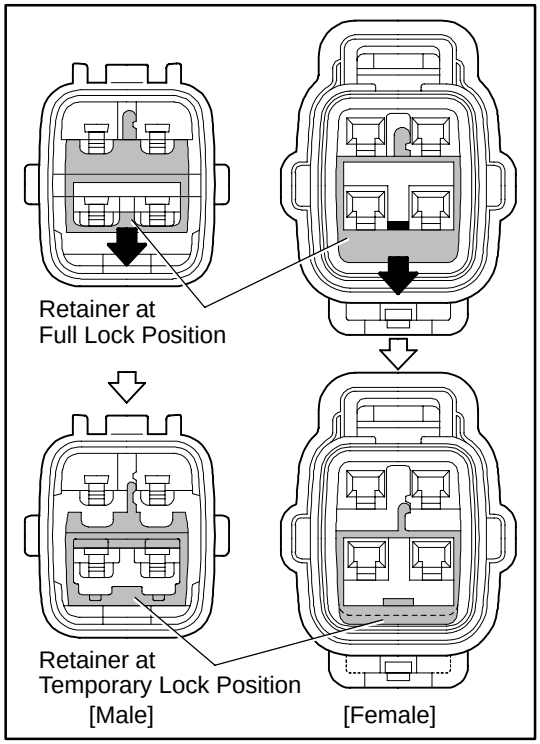

Push the terminal retainer down to the temporary lock position.

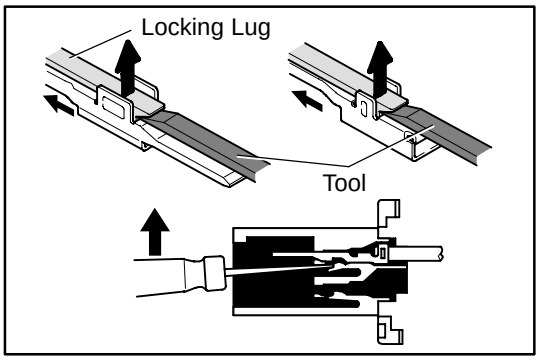

(c) Release the locking lug from terminal and pull the terminal out from rear.

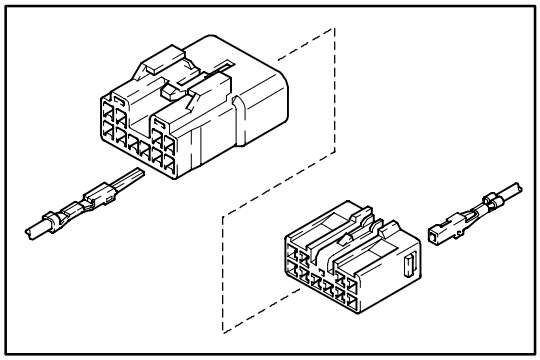

4. INSTALL TERMINAL TO CONNECTOR

(a) Insert the terminal.

HINT:
1. Make sure the terminal is positioned correctly.
2. Insert the terminal until the locking lug locks firmly.
3. Insert the terminal with terminal retainer in the temporary lock position.

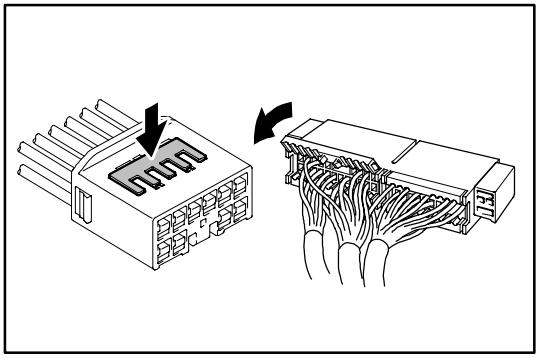

(b) Push the secondary locking device or terminal retainer in to the full lock position.

5. CONNECT CONNECTOR

ABBREVIATIONS

The following abbreviations are used in this manual.

ABS	=	Anti–Lock Brake System
A/C	=	Air Conditioning
COMB.	=	Combination
DC	=	Direct Current
ECU	=	Electronic Control Unit
EMPS	=	Electric Motor Power Steering
ESA	=	Electronic Spark Advance
EVAP	=	Evaporative Emission
HV	=	Hybrid Vehicle
J/B	=	Junction Block
LH	=	Left–Hand
PTC	=	Positive Temperature Coefficient
R/B	=	Relay Block
RH	=	Right–Hand
SFI	=	Sequential Multiport Fuel Injection
SRS	=	Supplemental Restraint System
SW	=	Switch
TEMP.	=	Temperature
VSV	=	Vacuum Switching Valve
w/	=	With
w/o	=	Without

* The titles given inside the components are the names of the terminals (terminal codes) and are not treated as being abbreviations.

E GLOSSARY OF TERMS AND SYMBOLS

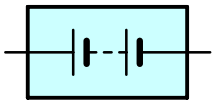

BATTERY
Stores chemical energy and converts it into electrical energy. Provides DC current for the auto's various electrical circuits.

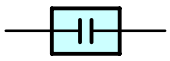

CAPACITOR (Condenser)
A small holding unit for temporary storage of electrical voltage.

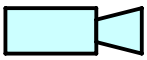

CIGARETTE LIGHTER
An electric resistance heating element.

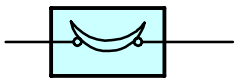

CIRCUIT BREAKER
Basically a reusable fuse, a circuit breaker will heat and open if too much current flows through it. Some units automatically reset when cool, others must be manually reset.



DIODE
A semiconductor which allows current flow in only one direction.



DIODE, ZENER
A diode which allows current flow in one direction but blocks reverse flow only up to a specific voltage. Above that potential, it passes the excess voltage. This acts as a simple voltage regulator.

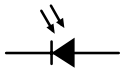

PHOTODIODE
The photodiode is a semiconductor which controls the current flow according to the amount of light.

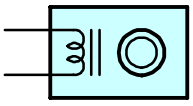

DISTRIBUTOR, IIA
Channels high–voltage current from the ignition coil to the individual spark plugs.

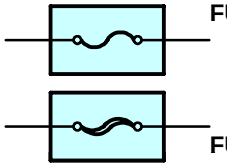

FUSE
A thin metal strip which burns through when too much current flows through it, thereby stopping current flow and protecting a circuit from damage.

(for Medium Current Fuse)

FUSIBLE LINK
A heavy–gauge wire placed in high amperage circuits which burns through on overloads, thereby protecting the circuit. The numbers indicate the crosssection surface area of the wires.

(for High Current Fuse or Fusible Link)



GROUND
The point at which wiring attaches to the Body, thereby providing a return path for an electrical circuit; without a ground, current cannot flow.

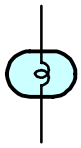

1. SINGLE FILAMENT



2. DOUBLE FILAMENT

HEADLIGHTS
Current flow causes a headlight filament to heat up and emit light. A headlight may have either a single (1) filament or a double (2) filament

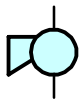

HORN
An electric device which sounds a loud audible signal.

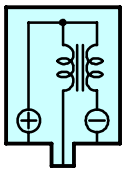

IGNITION COIL
Converts low–voltage DC current into high–voltage ignition current for firing the spark plugs.



LIGHT
Current flow through a filament causes the filament to heat up and emit light.



LED (LIGHT EMITTING DIODE)
Upon current flow, these diodes emit light without producing the heat of a comparable light.



METER, ANALOG
Current flow activates a magnetic coil which causes a needle to move, thereby providing a relative display against a background calibration.



METER, DIGITAL
Current flow activates one or many LED's, LCD's, or fluorescent displays, which provide a relative or digital display.



MOTOR
A power unit which converts electrical energy into mechanical energy, especially rotary motion.

RELAY

Basically, an electrically operated switch which may be normally closed (1) or open (2). Current flow through a small coil creates a magnetic field which either opens or closes an attached switch.

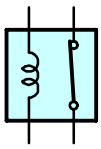

1. NORMALLY CLOSED

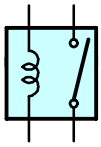

2. NORMALLY OPEN

RELAY, DOUBLE THROW

A relay which passes current through one set of contacts or the other.

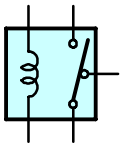

RESISTOR

An electrical component with a fixed resistance, placed in a circuit to reduce voltage to a specific value.

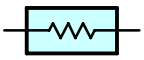

RESISTOR, TAPPED

A resistor which supplies two or more different non adjustable resistance values.

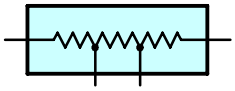

RESISTOR, VARIABLE or RHEOSTAT

A controllable resistor with a variable rate of resistance.
Also called a potentiometer or rheostat.



SENSOR (Thermistor)

A resistor which varies its resistance with temperature.

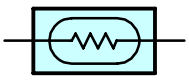

SENSOR, SPEED

Uses magnetic impulses to open and close a switch to create a signal for activation of other components.

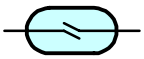

(Reed Switch Type)

SHORT PIN

Used to provide an unbroken connection within a junction block.

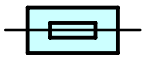

SOLENOID

An electromagnetic coil which forms a magnetic field when current flows, to move a plunger, etc.

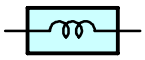

SPEAKER

An electromechanical device which creates sound waves from current flow.



SWITCH, MANUAL

Opens and closes circuits, thereby stopping (1) or allowing (2) current flow.

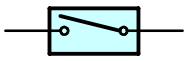

1. NORMALLY OPEN

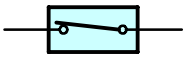

2. NORMALLY CLOSED

SWITCH, DOUBLE THROW

A switch which continuously passes current through one set of contacts or the other.

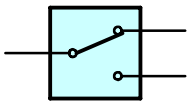

SWITCH, IGNITION

A key operated switch with several positions which allows various circuits, particularly the primary ignition circuit, to become operational.

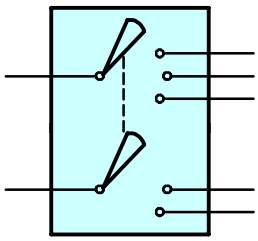

SWITCH, WIPER PARK

Automatically returns wipers to the stop position when the wiper switch is turned off.

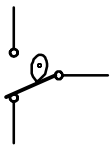

TRANSISTOR

A solidstate device typically used as an electronic relay; stops or passes current depending on the voltage applied at "base".

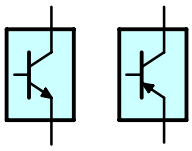

WIRES

Wires are always drawn as straight lines on wiring diagrams.
Crossed wires (1) without a black dot at the junction are not joined;
crossed wires (2) with a black dot or octagonal ( ) mark at the junction are spliced (joined) connections.

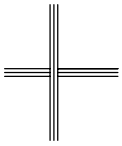

(1) NOT CONNECTED

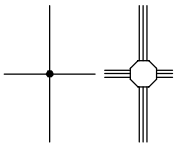

(2) SPLICED

F RELAY LOCATIONS

[Engine Compartment]

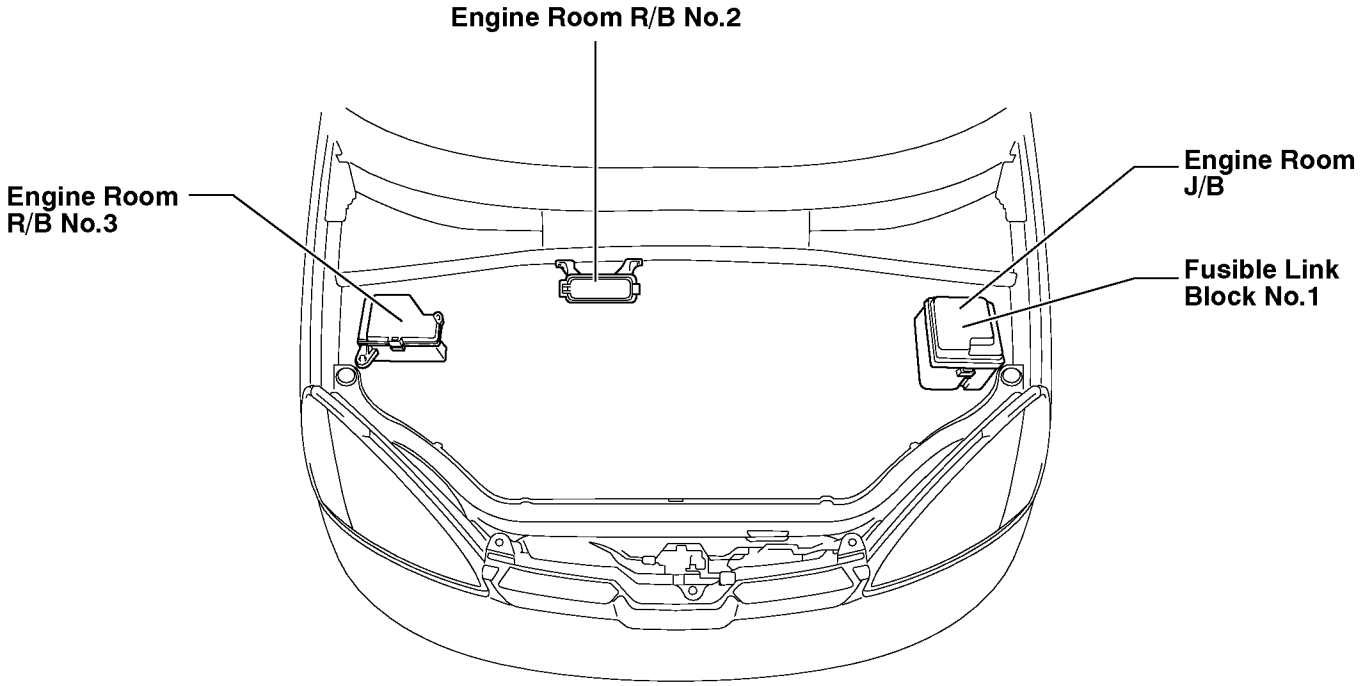

[Instrument Panel]

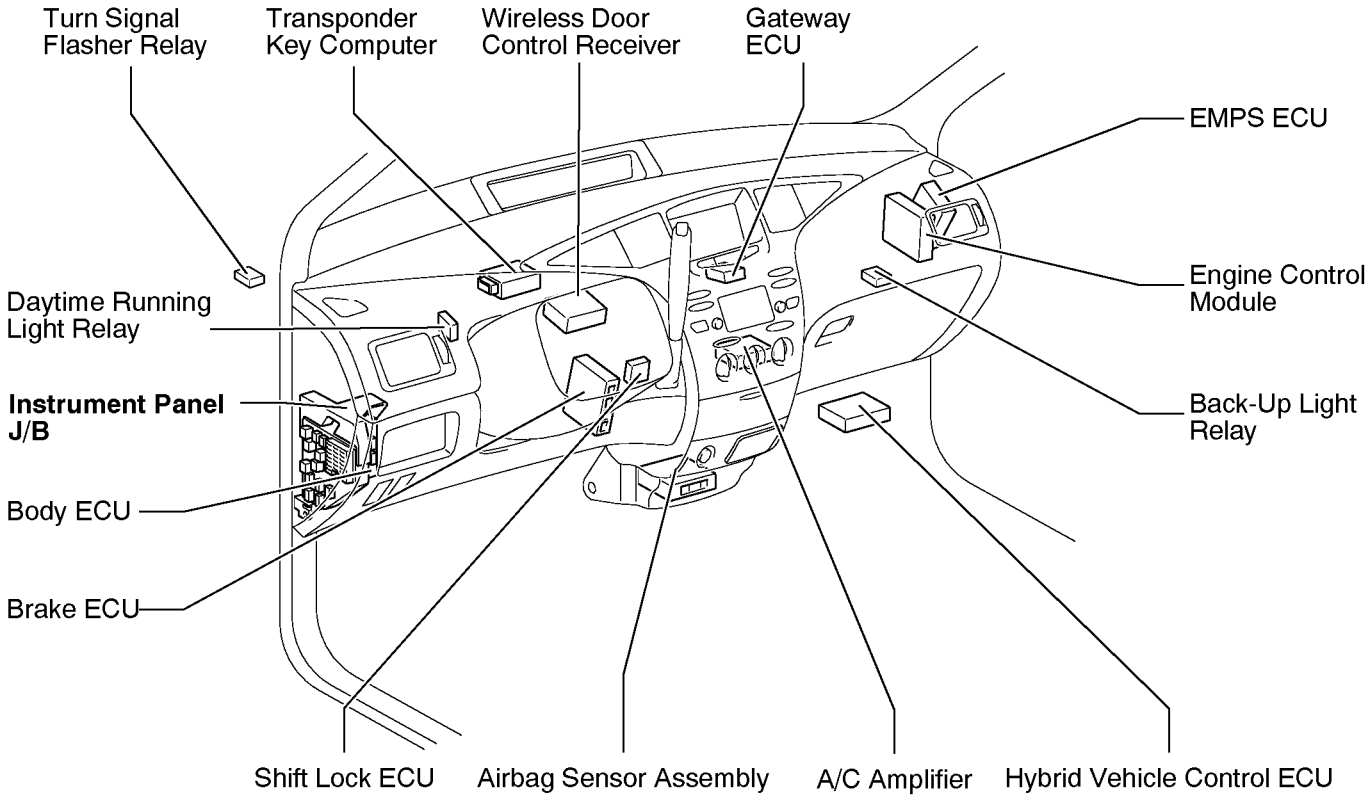

[Body]

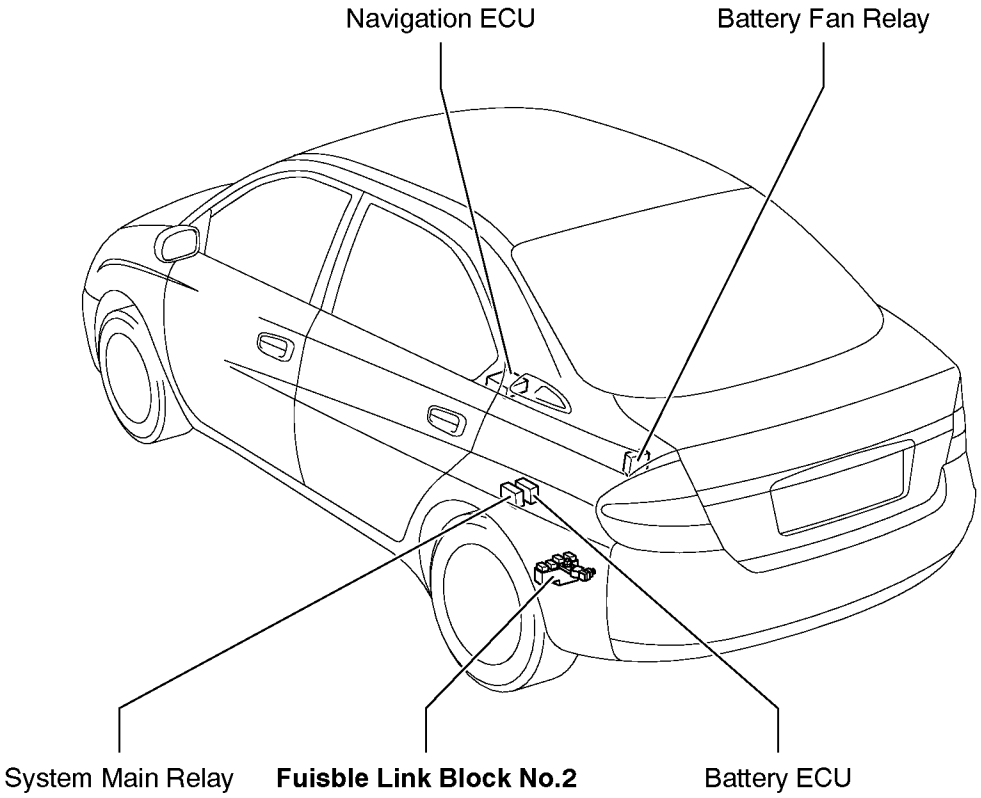
Navigation ECU
Battery Fan Relay
System Main Relay
Fuisble Link Block No.2
Battery ECU

F RELAY LOCATIONS

Fusible Link Block No.1	Engine Compartment Left (See Page 20)

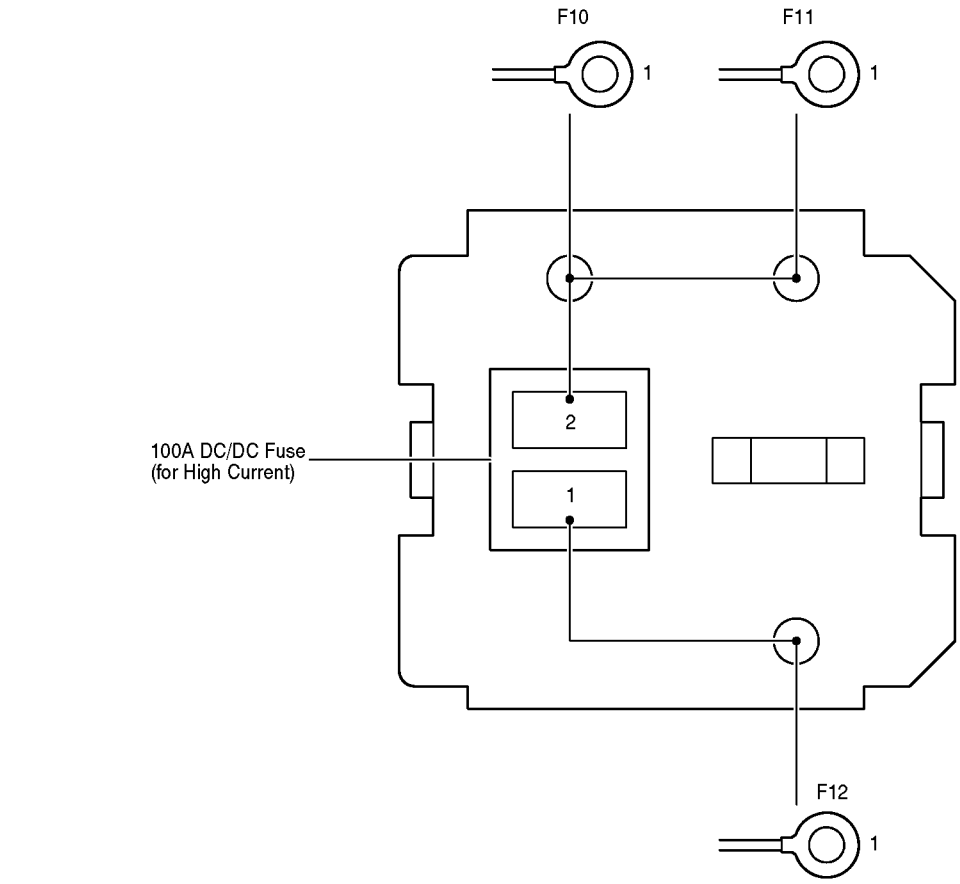

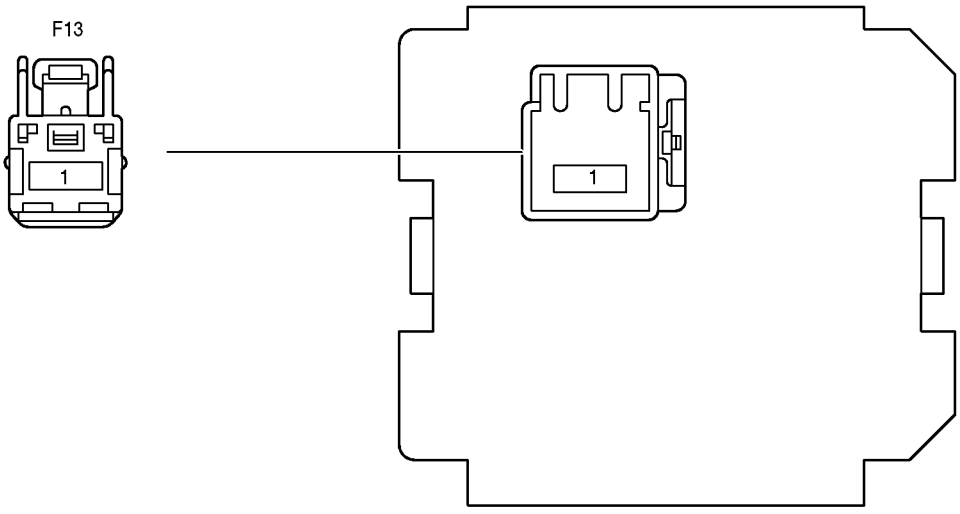

Fusible Link Block No.2	Luggage Room Left (See Page 21)

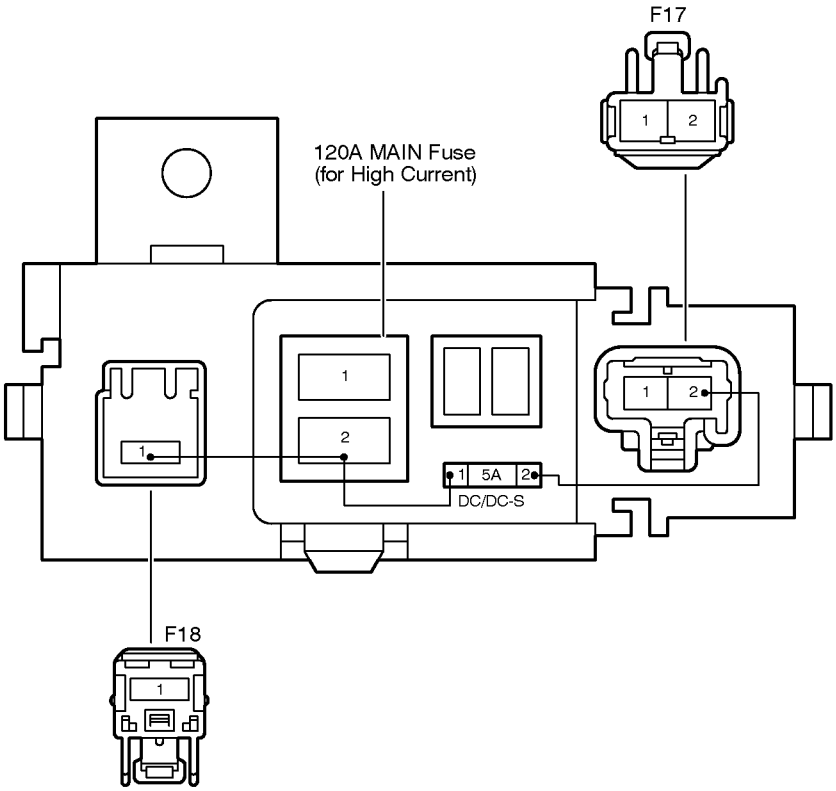

② : Engine Room R/B No.2	Right Side of Reserve Tank (See Page 20)

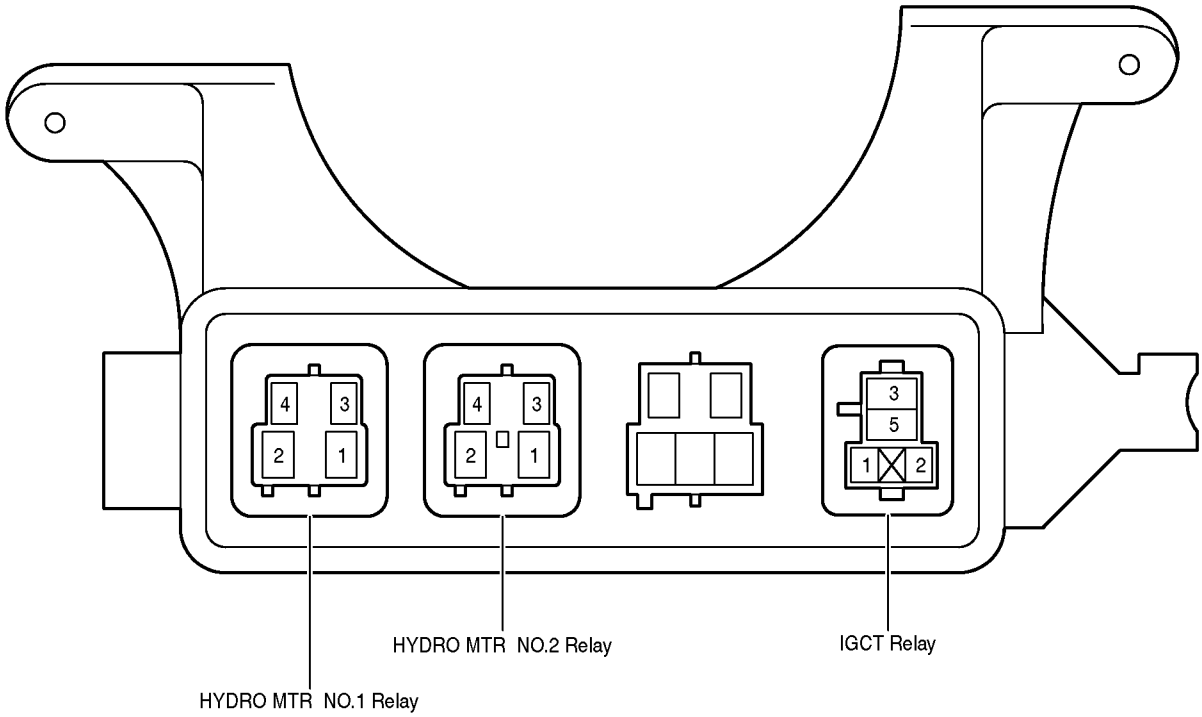

F RELAY LOCATIONS

③ : Engine Room R/B No.3	Engine Compartment Right (See Page 20)

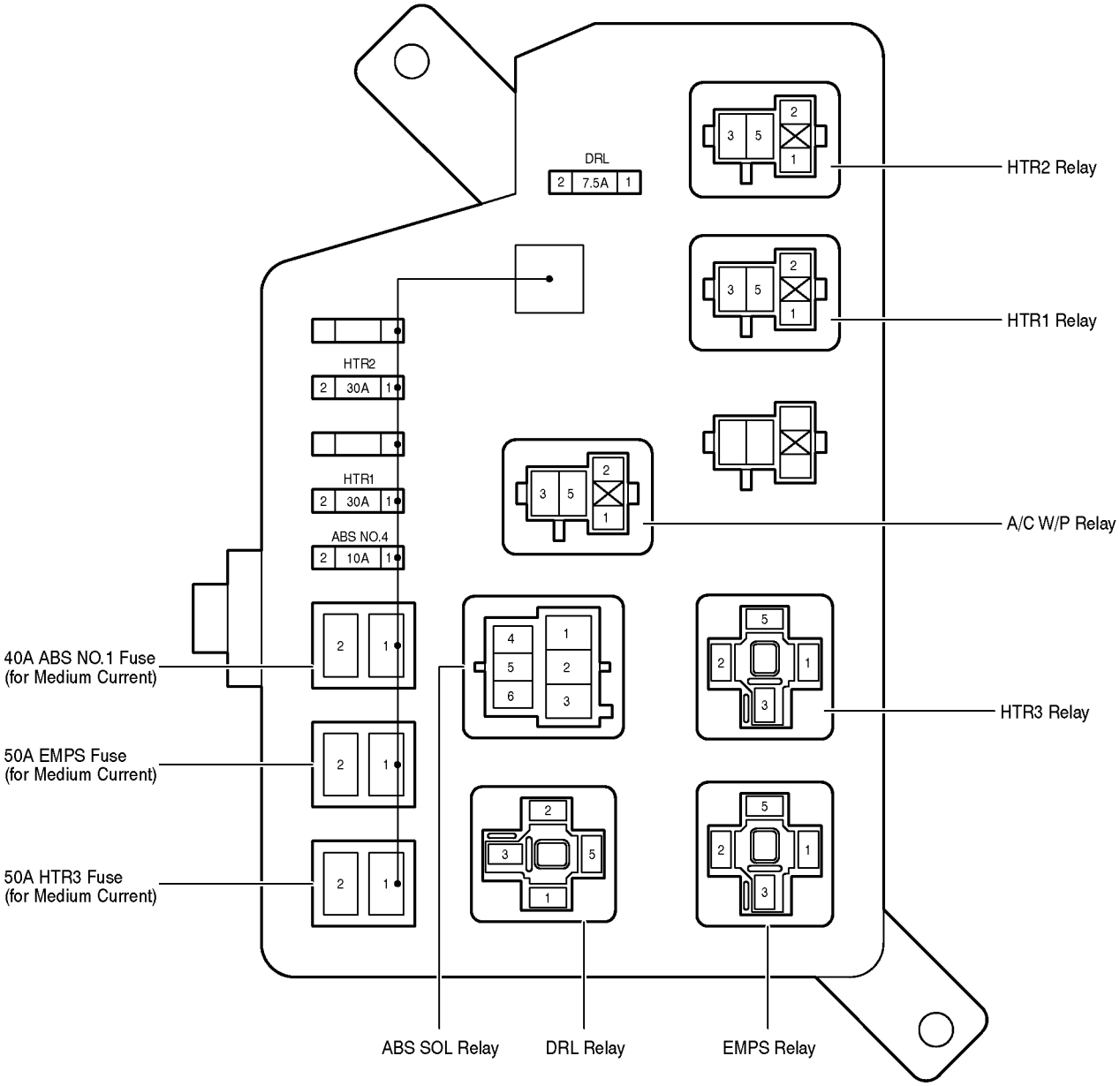

F RELAY LOCATIONS

: Engine Room J/B	Engine Compartment Left (See Page 20)

∗1 : HEAD LO (LH) (w/ Daytime Running Light)
HEAD (LH) (w/o Daytime Running Light)
∗2 : HEAD LO (RH) (w/ Daytime Running Light)
HEAD (RH) (w/o Daytime Running Light)
∗3 : w/ Daytime Running Light
∗4 : w/o Daytime Running Light

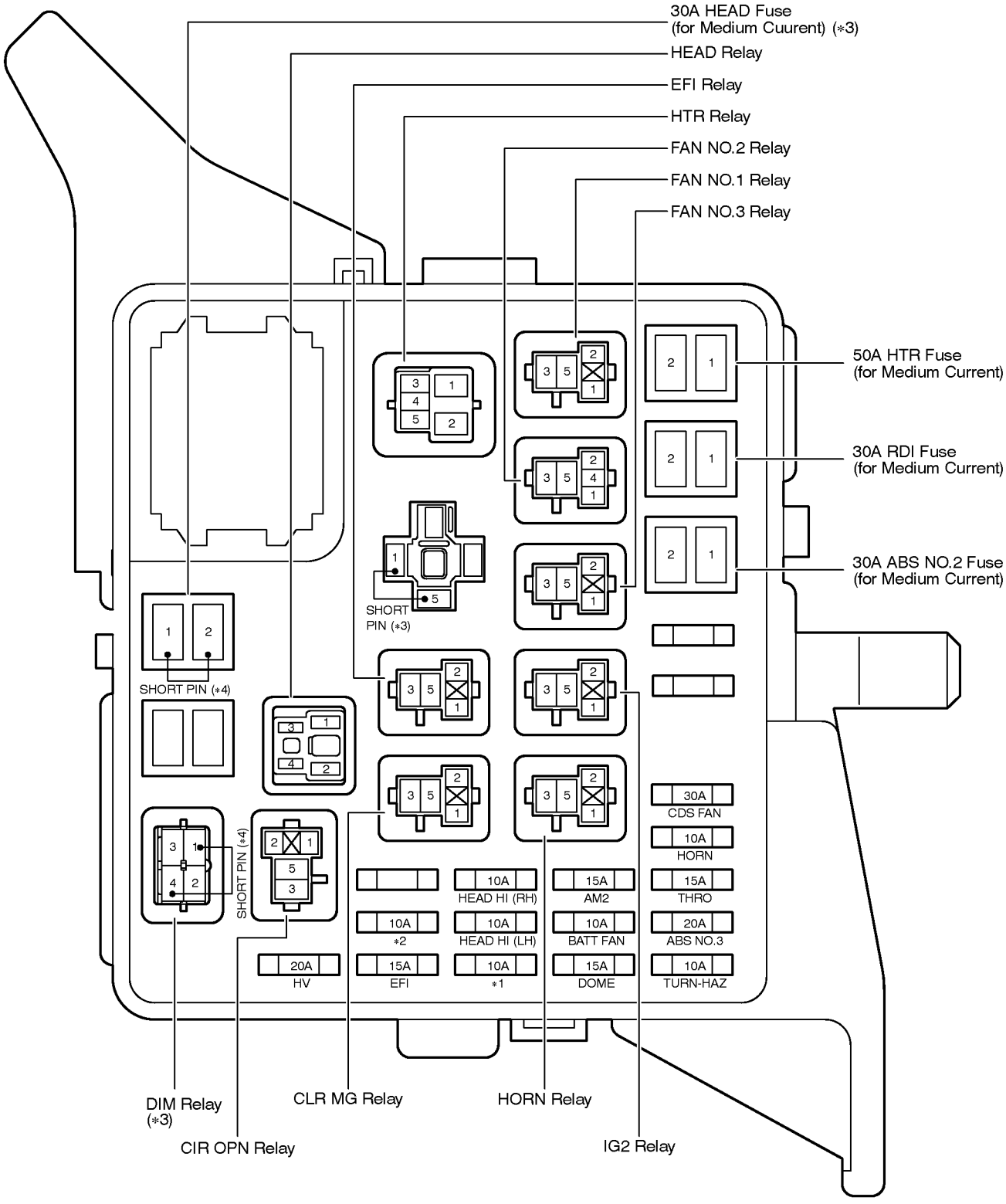

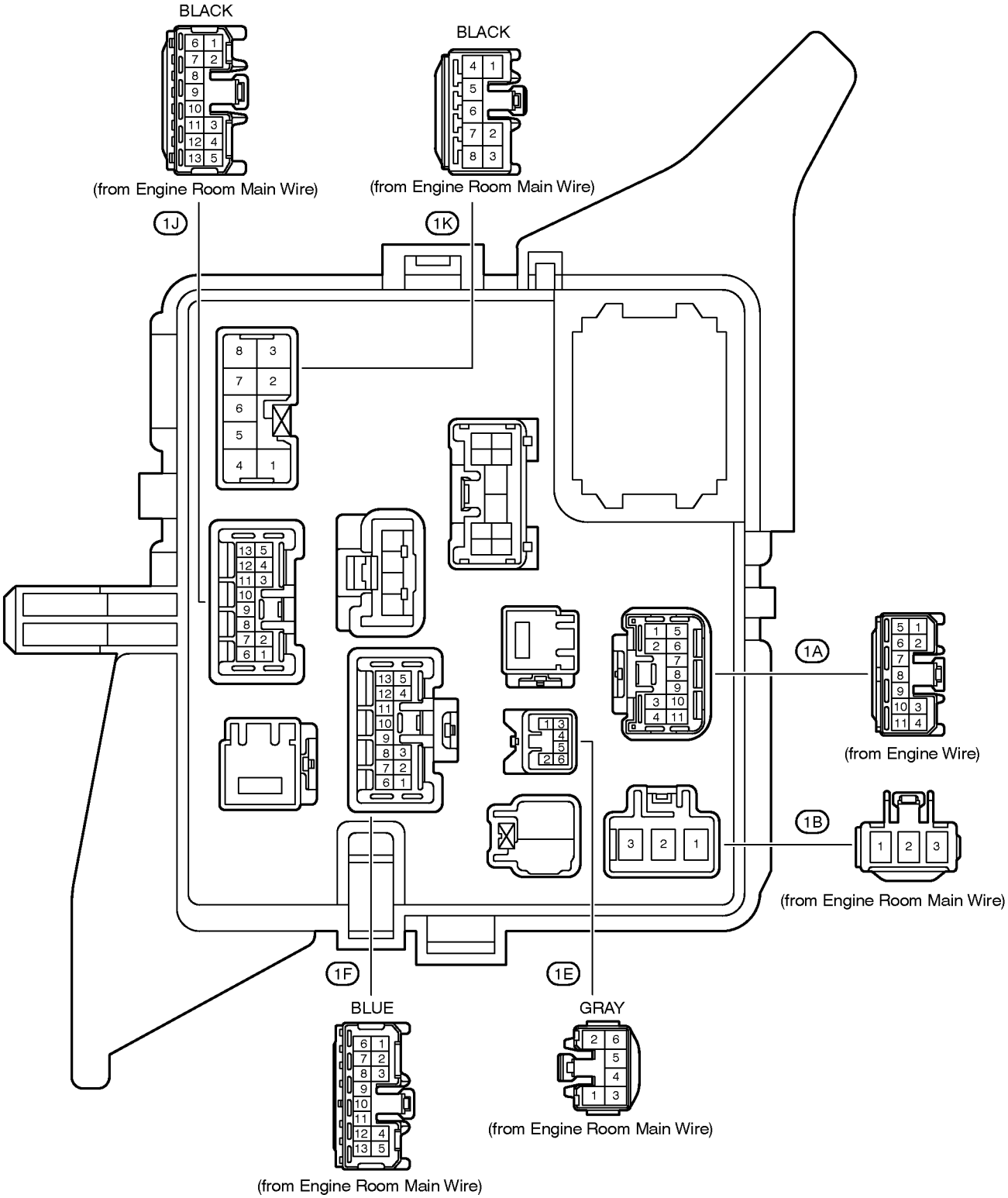
BLACK
(from Engine Room Main Wire)
BLACK
(from Engine Room Main Wire)
1J
1K
1A
(from Engine Wire)
1B
(from Engine Room Main Wire)
1F
1E
BLUE
(from Engine Room Main Wire)
GRAY
(from Engine Room Main Wire)

F RELAY LOCATIONS

[Engine Room J/B Inner Circuit]

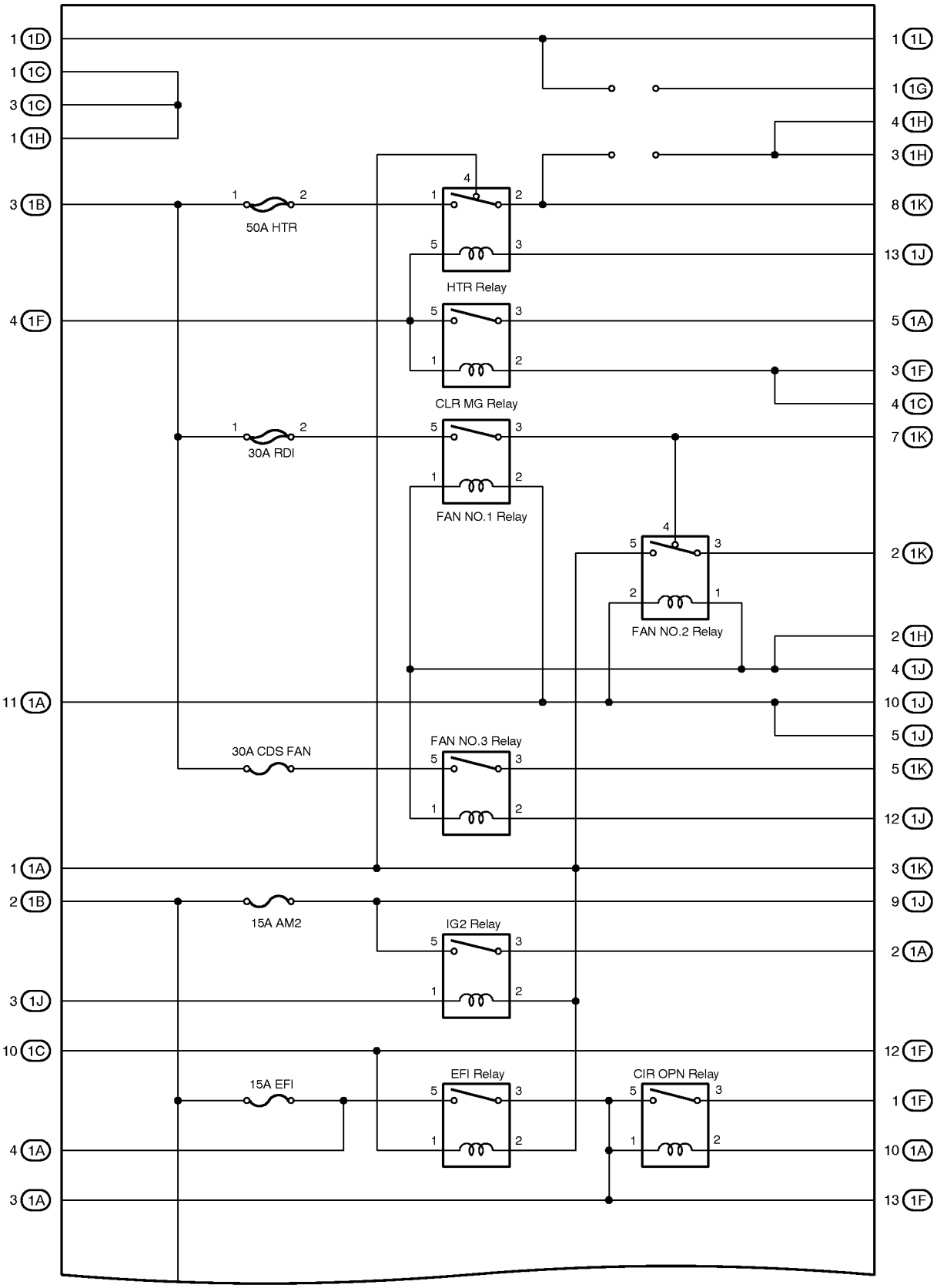

(Cont. next page)

(Cont'd)

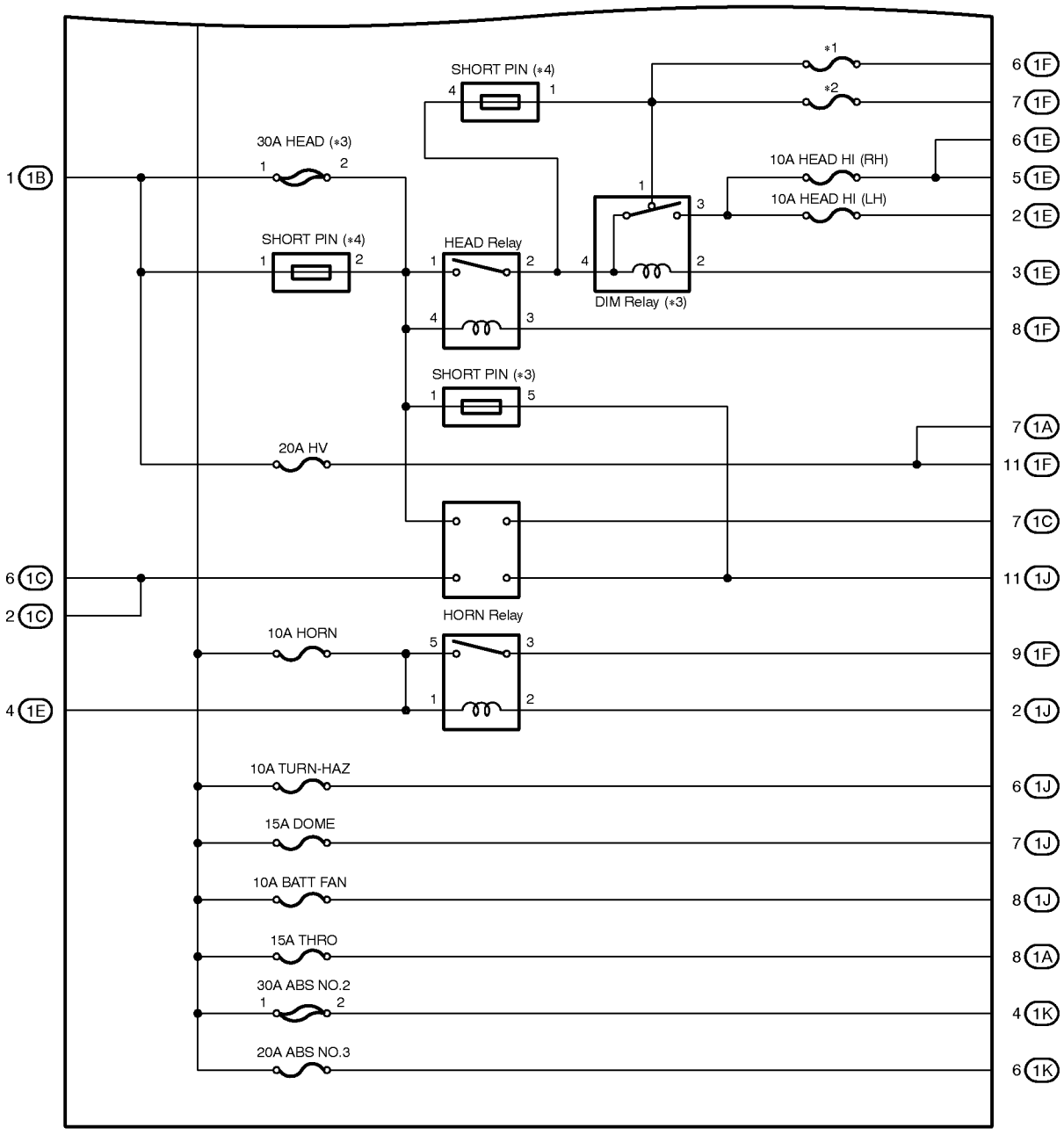

*1 : 10A HEAD LO (LH) (w/ Daytime Running Light)
10A HEAD (LH) (w/o Daytime Running Light)
*2 : 10A HEAD LO (RH) (w/ Daytime Running Light)
10A HEAD (RH) (w/o Daytime Running Light)
*3 : w/ Daytime Running Light
*4 : w/o Daytime Running Light

F RELAY LOCATIONS

: Instrument Panel J/B	Cowl Side Panel LH (See Page 20)

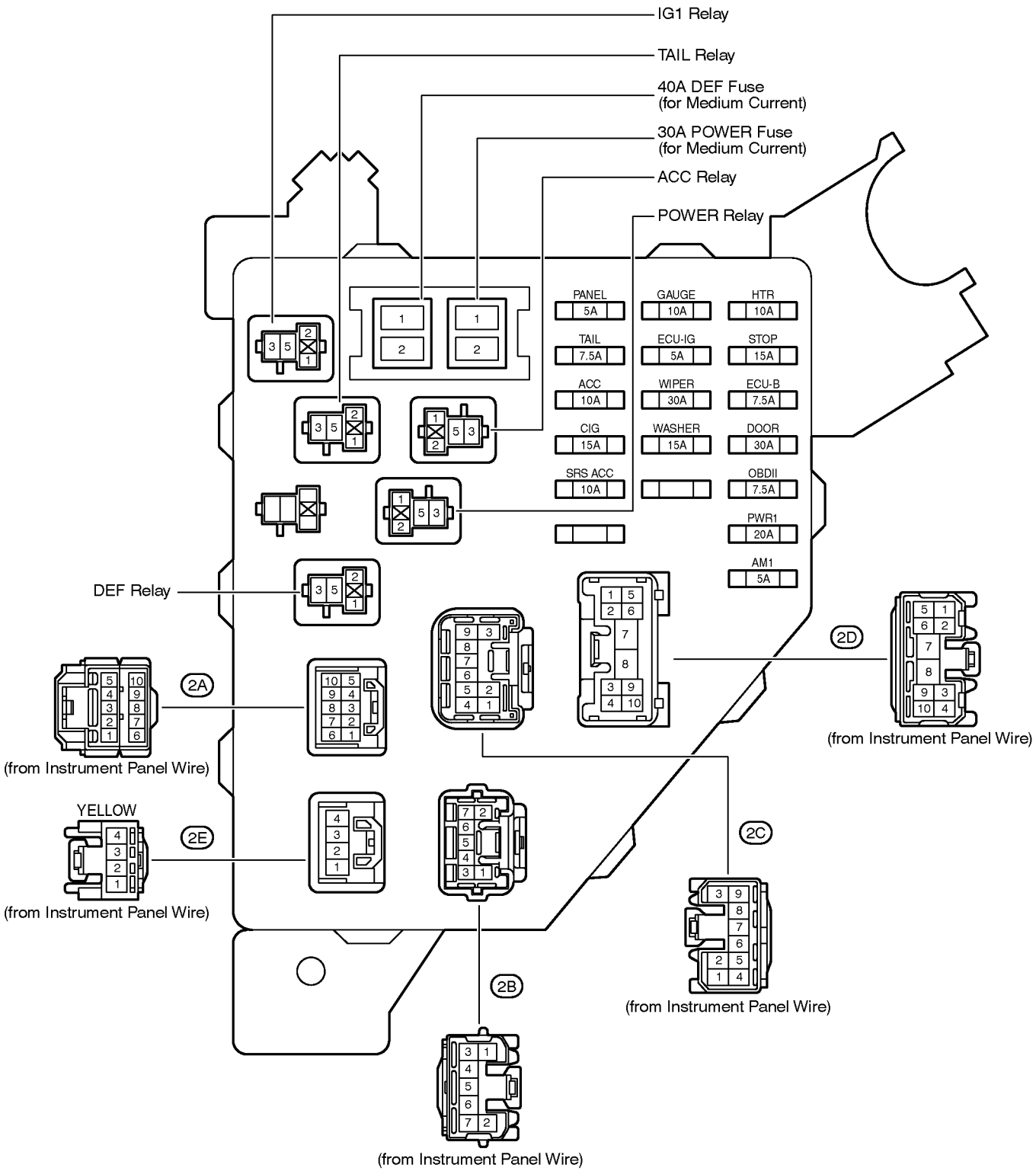

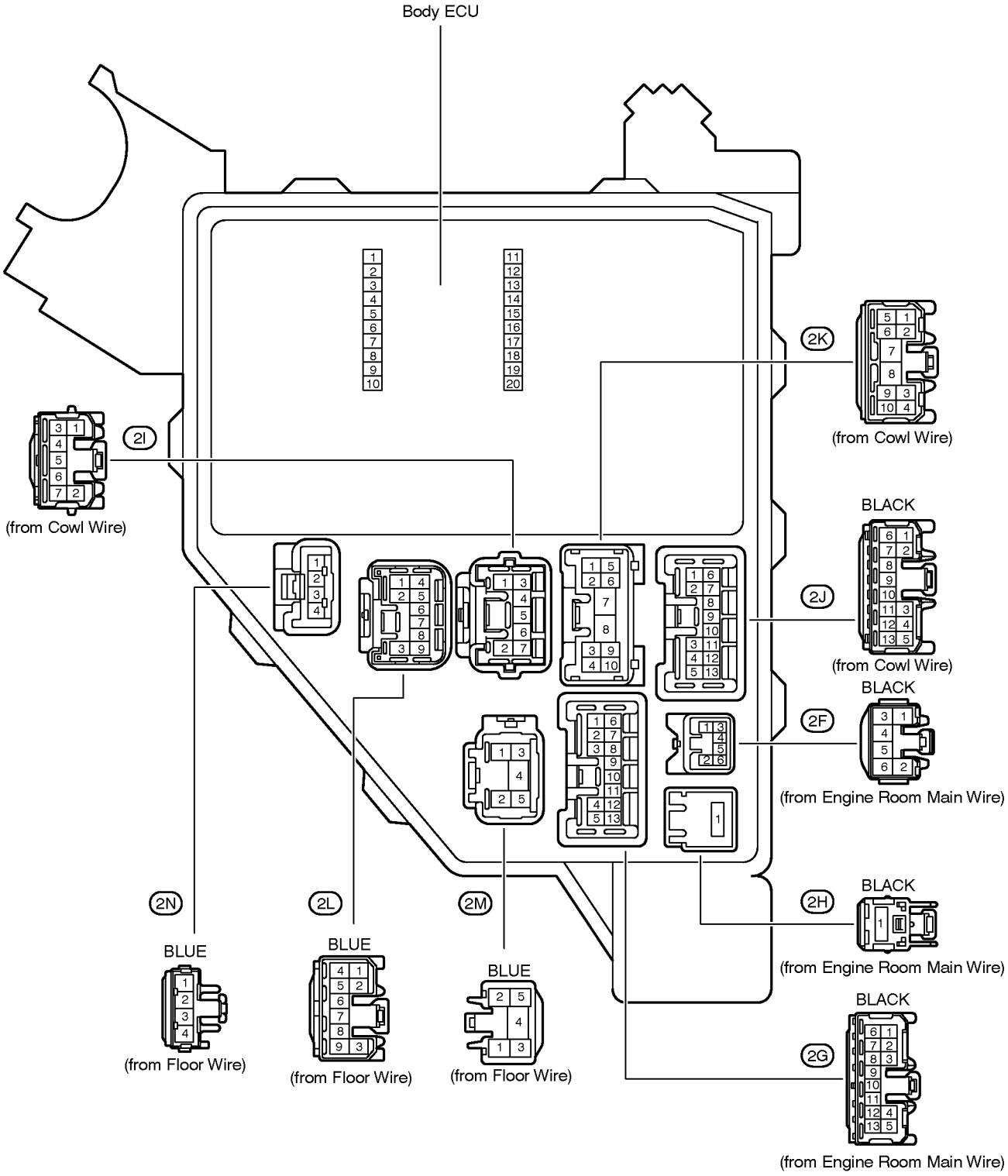
Body ECU
2K
(from Cowl Wire)
2I
(from Cowl Wire)
BLACK
2J
(from Cowl Wire)
BLACK
2F
(from Engine Room Main Wire)
2N
BLUE
(from Floor Wire)
2L
BLUE
(from Floor Wire)
2M
BLUE
(from Floor Wire)
BLACK
2H
(from Engine Room Main Wire)
BLACK
2G
(from Engine Room Main Wire)

F RELAY LOCATIONS

[Instrument Panel J/B Inner Circuit]

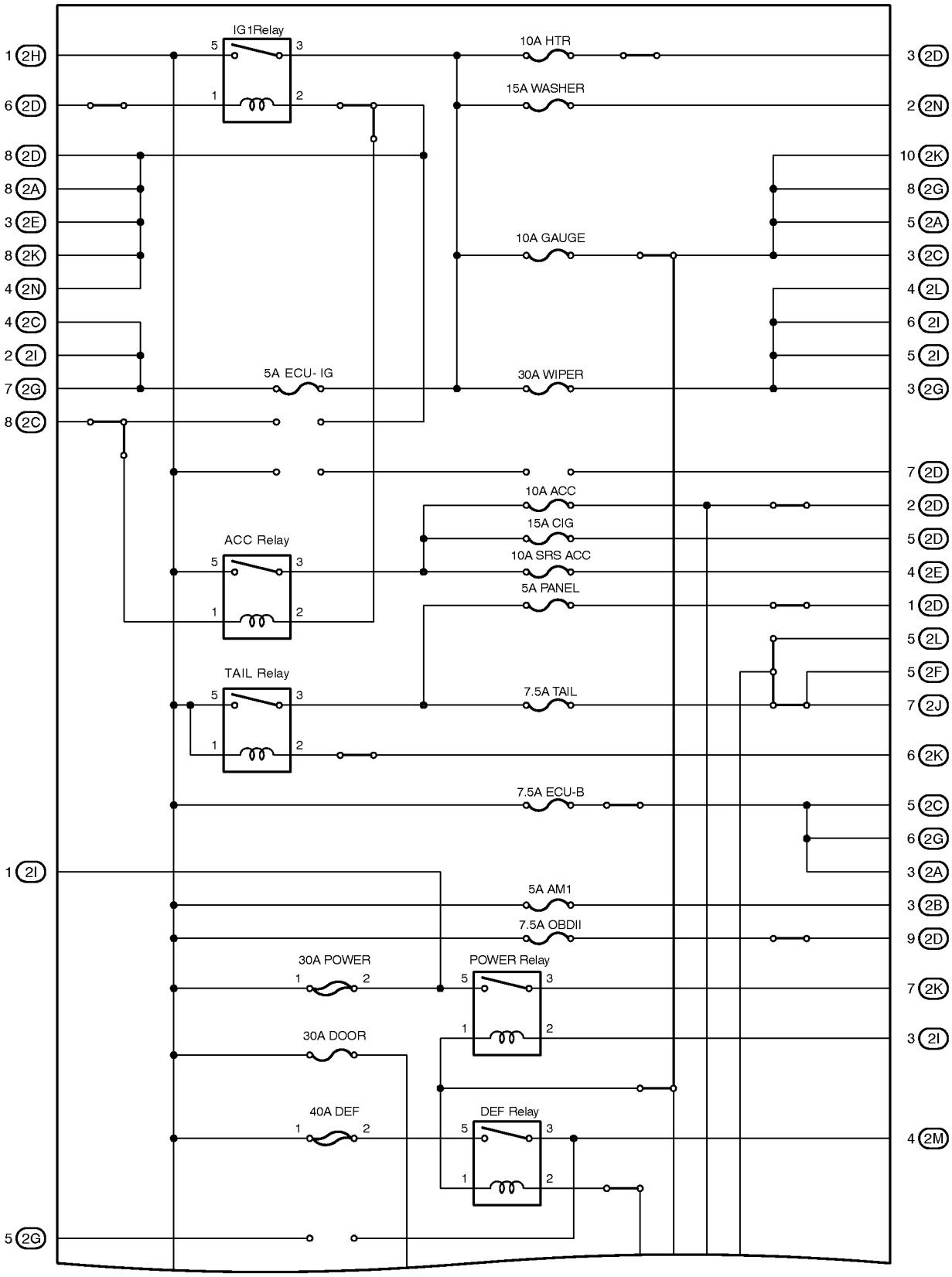

(Cont. next page)

(Cont'd)

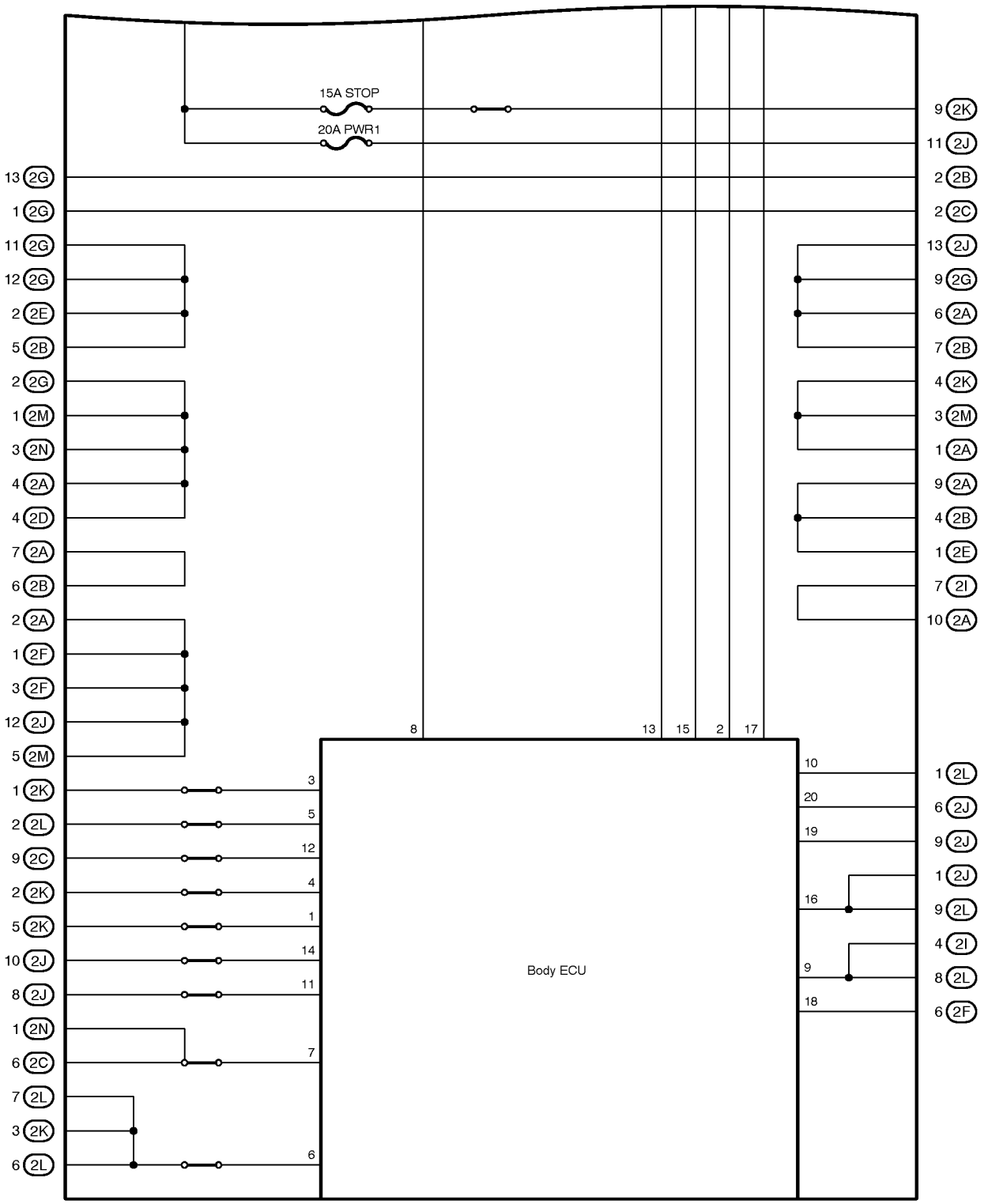
15A STOP
20A PWR1
13 2G
1 2G
11 2G
12 2G
2 2E
5 2B
2 2G
1 2M
3 2N
4 2A
4 2D
7 2A
6 2B
2 2A
1 2F
3 2F
12 2J
5 2M
1 2K
2 2L
9 2C
2 2K
5 2K
10 2J
8 2J
1 2N
6 2C
7 2L
3 2K
6 2L
9 2K
11 2J
2 2B
2 2C
13 2J
9 2G
6 2A
7 2B
4 2K
3 2M
1 2A
9 2A
4 2B
1 2E
7 2I
10 2A
1 2L
6 2J
9 2J
1 2J
9 2L
4 2I
8 2L
6 2F
8
13
15
2
17
3
5
12
4
1
14
11
7
6
10
20
19
16
9
18
Body ECU

G ELECTRICAL WIRING ROUTING

Position of Parts in Engine Compartment

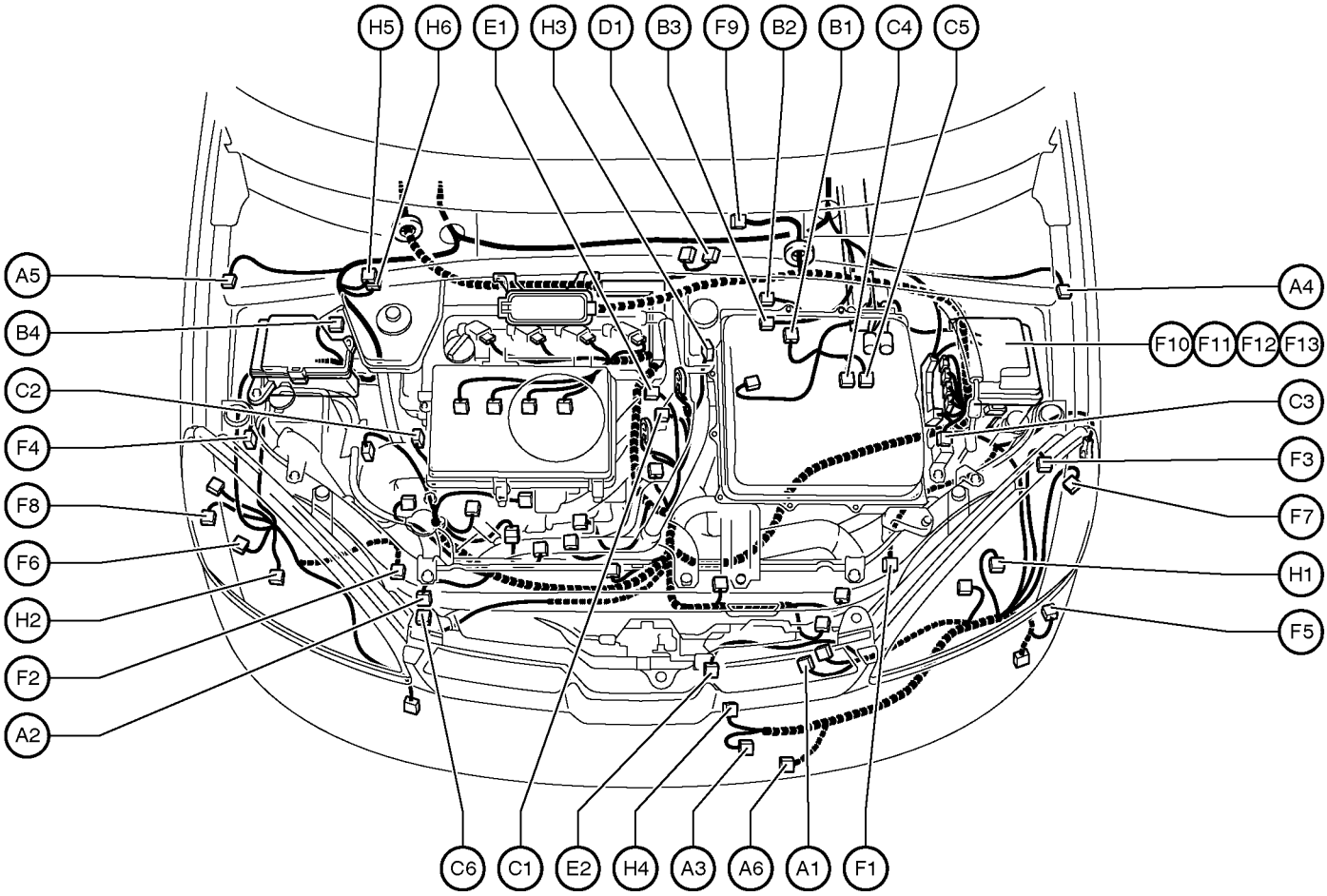

A 1 A/C Condenser Fan Motor
A 2 A/C Magnetic Clutch and Lock Sensor
A 3 A/C Triple Pressure SW
(A/C Dual and Single Pressure SW)
A 4 ABS Speed Sensor Front LH
A 5 ABS Speed Sensor Front RH
A 6 Ambient Temp. Sensor

B 1 Brake Actuator
B 2 Brake Actuator
B 3 Brake Actuator
B 4 Brake Fluid Level Warning SW

C 1 Camshaft Position Sensor
C 2 Camshaft Timing Oil Control Valve
C 3 Circuit Breaker Sensor
C 4 Converter
C 5 Converter
C 6 Crankshaft Position Sensor

D 1 DC Motor

E 1 Engine Coolant Temp. Sensor
E 2 Engine Hood Courtesy SW

F 1 Front Airbag Sensor LH
F 2 Front Airbag Sensor RH
F 3 Front Parking Light LH
F 4 Front Parking Light RH
F 5 Front Side Marker Light LH
F 6 Front Side Marker Light RH
F 7 Front Turn Signal Light LH
F 8 Front Turn Signal Light RH
F 9 Front Wiper Motor
F 10 Fusible Link Block No.1
F 11 Fusible Link Block No.1
F 12 Fusible Link Block No.1
F 13 Fusible Link Block No.1

H 1 Headlight LH
H 2 Headlight RH
H 3 Heated Oxygen Sensor (Bank 1 Sensor1)
H 4 Horn
H 5 Hydraulic Booster
H 6 Hydraulic Booster

Position of Parts in Engine Compartment

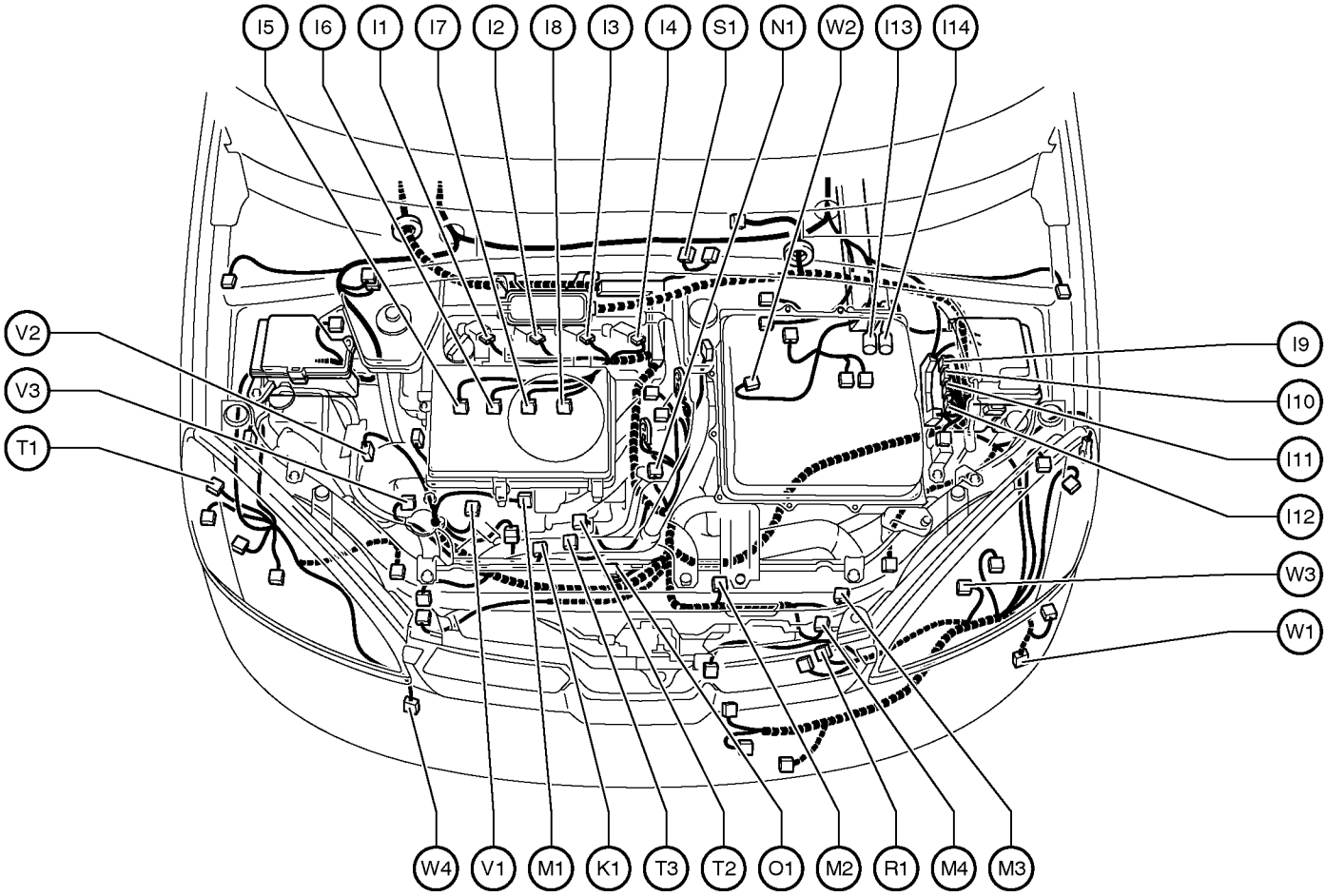

I 1 Ignition Coil and Igniter No.1
I 2 Ignition Coil and Igniter No.2
I 3 Ignition Coil and Igniter No.3
I 4 Ignition Coil and Igniter No.4
I 5 Injector No.1
I 6 Injector No.2
I 7 Injector No.3
I 8 Injector No.4
I 9 Inverter
I 10 Inverter
I 11 Inverter
I 12 Inverter
I 13 Inverter
I 14 Inverter

K 1 Knock Sensor

M 1 Mass Air Flow Meter
M 2 Motor Generator No.1
M 3 Motor Generator No.2
M 4 Motor Generator No.2

N 1 Noise Filter (Ignition)

O 1 Oil Pressure SW

R 1 Radiator Fan Motor

S 1 Steering Shaft Torque Sensor

T 1 Theft Deterrent Horn
T 2 Throttle Control Motor
T 3 Throttle Position Sensor

V 1 Vacuum Sensor (HC Adsorber and Catalyst System)
V 2 VSV (EVAP)
V 3 VSV (HC Adsorber and Catalyst System)

W 1 Washer Motor
W 2 Water Pump Motor (A/C)
W 3 Water Pump Motor (Inverter)
W 4 Water Temp. SW

G ELECTRICAL WIRING ROUTING

Position of Parts in Instrument Panel

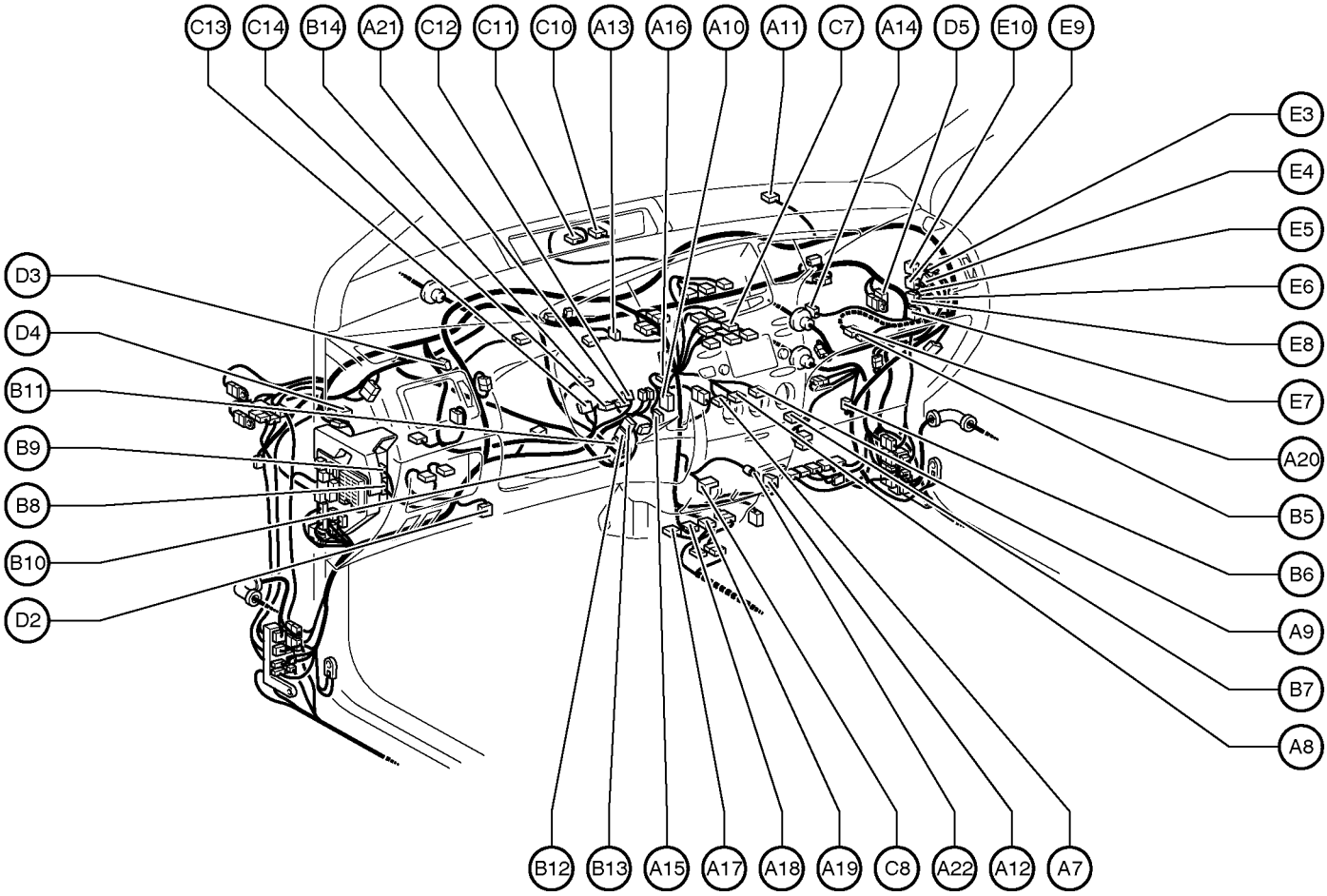

A 7 A/C Amplifier
A 8 A/C Amplifier
A 9 A/C Amplifier
A10 A/C Room Temp. Sensor
A11 A/C Solar Sensor
A12 A/C Thermistor
A13 Accel Position Sensor
A14 Air Inlet Control Servo Motor
A15 Air Mix Control Servo Motor
A16 Air Vent Mode Control Servo Motor
A17 Airbag Sensor Assembly
A18 Airbag Sensor Assembly
A19 Airbag Sensor Assembly
A20 Airbag Squib (Front Passenger Airbag Assembly)
A21 Airbag Squib (Steering Wheel Pad)
A22 Ashtray Illumination

B 5 Back–Up Light Relay
B 6 Blower Motor
B 7 Blower Motor Linear Controller
B 8 Body ECU
B 9 Body ECU
B10 Brake ECU
B11 Brake ECU
B12 Brake ECU
B13 Brake ECU
B14 Brake Warning Buzzer

C 7 Center Cluster SW
C 8 Cigarette Lighter
C10 Combination Meter
C11 Combination Meter
C12 Combination SW
C13 Combination SW
C14 Combination SW

D 2 Data Link Connector 3
D 3 Daytime Running Light Relay
D 4 Diode (Door Courtesy)
D 5 Diode (Daytime Running Light)

E 3 EMPS ECU
E 4 EMPS ECU
E 5 EMPS ECU
E 6 EMPS ECU
E 7 Engine Control Module
E 8 Engine Control Module
E 9 Engine Control Module
E10 Engine Control Module

Position of Parts in Instrument Panel

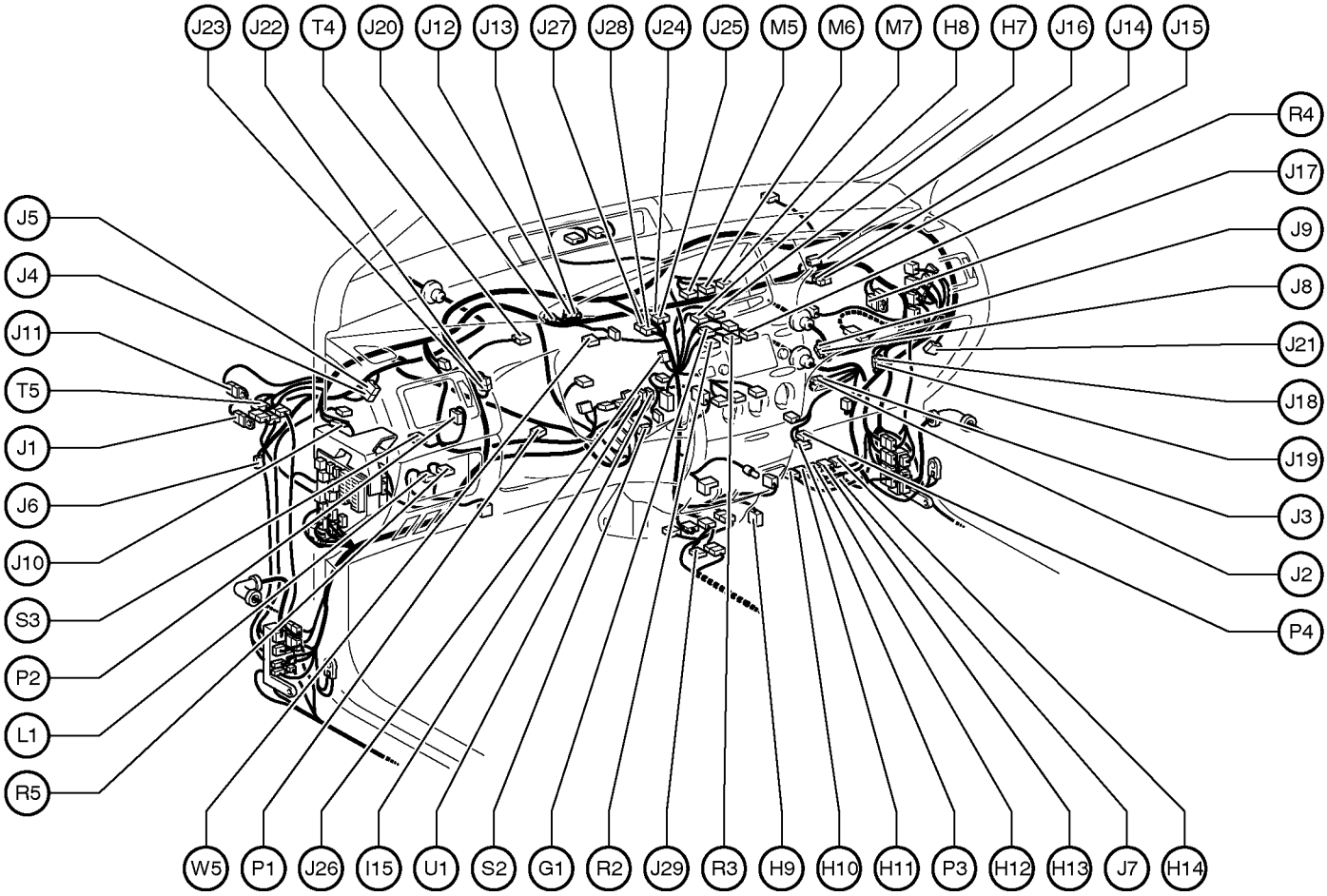

G 1 Gateway ECU

H 7 Hazard Warning SW
H 8 Hazard Warning SW
H 9 Heated Oxygen Sensor (Bank 1 Sensor 2)
H10 Hybrid Vehicle Control ECU
H11 Hybrid Vehicle Control ECU
H12 Hybrid Vehicle Control ECU
H13 Hybrid Vehicle Control ECU
H14 Hybrid Vehicle Control ECU

I 15 Ignition SW

J 1 Junction Connector
J 2 Junction Connector
J 3 Junction Connector
J 4 Junction Connector
J 5 Junction Connector
J 6 Junction Connector
J 7 Junction Connector
J 8 Junction Connector
J 9 Junction Connector
J 10 Junction Connector
J 11 Junction Connector
J 12 Junction Connector
J 13 Junction Connector
J 14 Junction Connector
J 15 Junction Connector
J 16 Junction Connector
J 17 Junction Connector
J 18 Junction Connector
J 19 Junction Connector
J 20 Junction Connector
J 21 Junction Connector
J 22 Junction Connector
J 23 Junction Connector
J 24 Junction Connector
J 25 Junction Connector
J 26 Junction Connector
J 27 Junction Connector
J 28 Junction Connector
J 29 Junction Connector

L 1 Light Control Rheostat

M 5 Multi Display
M 6 Multi Display
M 7 Multi Display

P 1 Park/Neutral Position SW
P 2 Parking Brake SW
P 3 PTC Heater
P 4 PTC Heater

R 2 Radio and Player
R 3 Radio and Player
R 4 Radio and Player
R 5 Remote Control Mirror SW

S 2 Shift Lock ECU
S 3 Stop Light SW

T 4 Transponder Key Computer
T 5 Turn Signal Flasher Relay

U 1 Unlock Warning SW and Key Interlock Solenoid

W 5 Wireless Door Control Receiver

G ELECTRICAL WIRING ROUTING

Position of Parts in Body

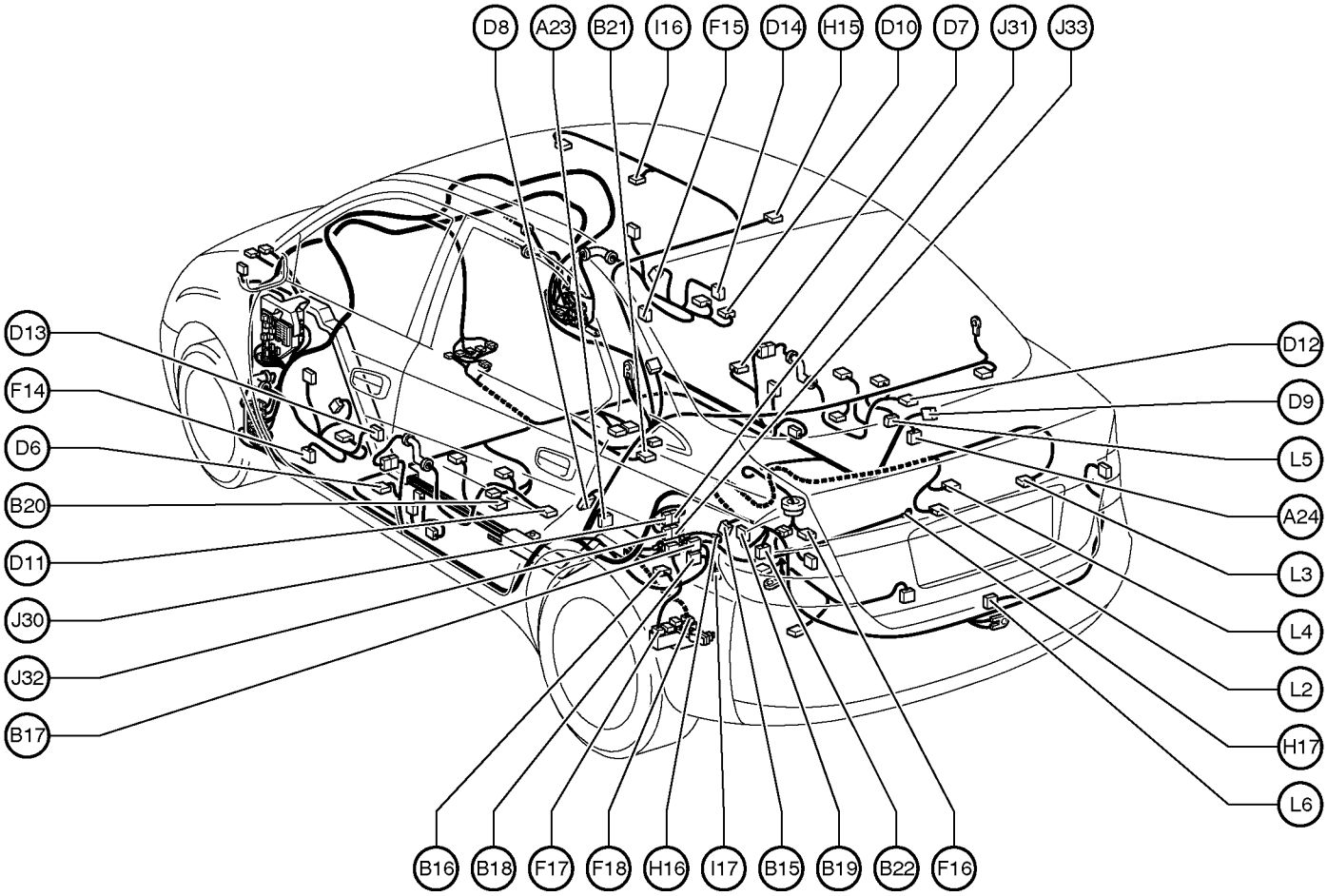

A23 ABS Speed Sensor Rear LH
A24 ABS Speed Sensor Rear RH

B15 Battery Blower Motor
B16 Battery Blower Motor Controller
B17 Battery ECU
B18 Battery ECU
B19 Battery Fan Relay
B20 Buckle SW and Tension Reducer LH
B21 Buckle SW RH and
Seat Belt Warning Occupant Detection Sensor
B22 Battery Input Relay

D 6 Door Courtesy SW Front LH
D 7 Door Courtesy SW Front RH
D 8 Door Courtesy SW Rear LH
D 9 Door Courtesy SW Rear RH
D10 Door Lock Control SW Front RH
D11 Door Lock Motor and Door Unlock Detection SW Rear LH
D12 Door Lock Motor and Door Unlock Detection SW Rear RH
D13 Door Lock Motor, Door Key Lock and Unlock SW and Door Unlock Detection SW Front LH
D14 Door Lock Motor, Door Key Lock and Unlock SW and Door Unlock Detection SW Front RH

F 14 Front Door Speaker LH
F 15 Front Door Speaker RH
F 16 Fuel Pump and Fuel Sender
F 17 Fusible Link Block No.2
F 18 Fusible Link Block No.2

H15 High Mounted Stop Light
H16 Hybrid Vehicle Battery
H17 Hybrid Vehicle Battery

I 16 Interior Light
I 17 Interlock SW

J 30 Junction Connector
J 31 Junction Connector
J 32 Junction Connector
J 33 Junction Connector

L 2 License Plate Light LH
L 3 License Plate Light RH
L 4 Luggage Compartment Door Unlock SW
L 5 Luggage Compartment Light
L 6 Luggage Compartment Light SW

Position of Parts in Body

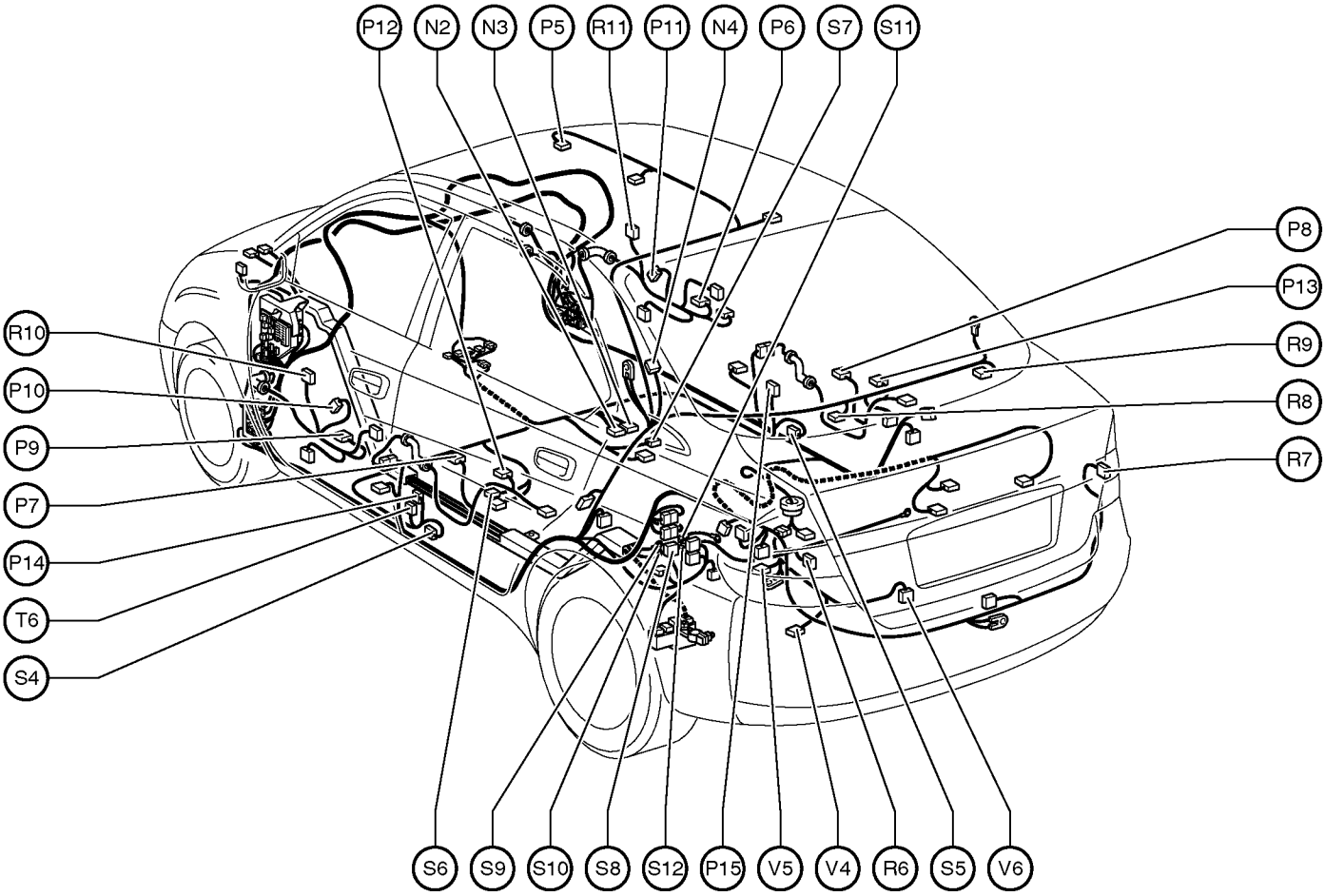

N 2 Navigation ECU
N 3 Navigation ECU
N 4 Noise Filter (Rear Window Defogger)

P 5 Personal Light
P 6 Power Window Control SW Front RH
P 7 Power Window Control SW Rear LH
P 8 Power Window Control SW Rear RH
P 9 Power Window Master SW
P10 Power Window Motor Front LH
P11 Power Window Motor Front RH
P12 Power Window Motor Rear LH
P13 Power Window Motor Rear RH
P14 Pretensioner LH
P15 Pretensioner RH

R 6 Rear Combination Light LH
R 7 Rear Combination Light RH
R 8 Rear Speaker LH
R 9 Rear Speaker RH
R10 Remote Control Mirror LH
R11 Remote Control Mirror RH

S 4 Side Airbag Sensor LH
S 5 Side Airbag Sensor RH
S 6 Side Airbag Squib LH
S 7 Side Airbag Squib RH
S 8 System Main Relay
S 9 System Main Relay
S10 System Main Relay
S11 System Main Relay
S12 System Main Relay

T 6 Tension Reducer Solenoid

V 4 Vapor Pressure Sensor
V 5 VSV (Canister Closed Valve)
V 6 VSV (Parge Flow Switching Valve)

G ELECTRICAL WIRING ROUTING

▭ : Location of Connector Joining Wire Harness and Wire Harness
▽ : Location of Ground Points

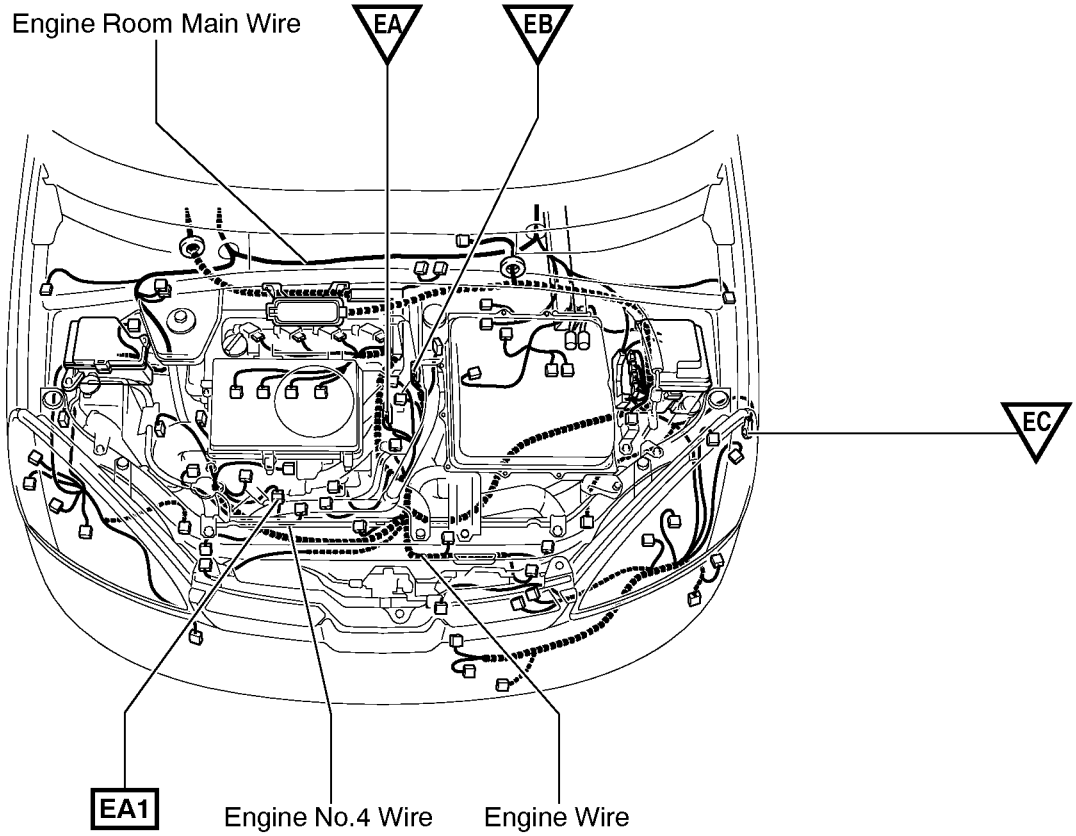

⬡ : Location of Splice Points

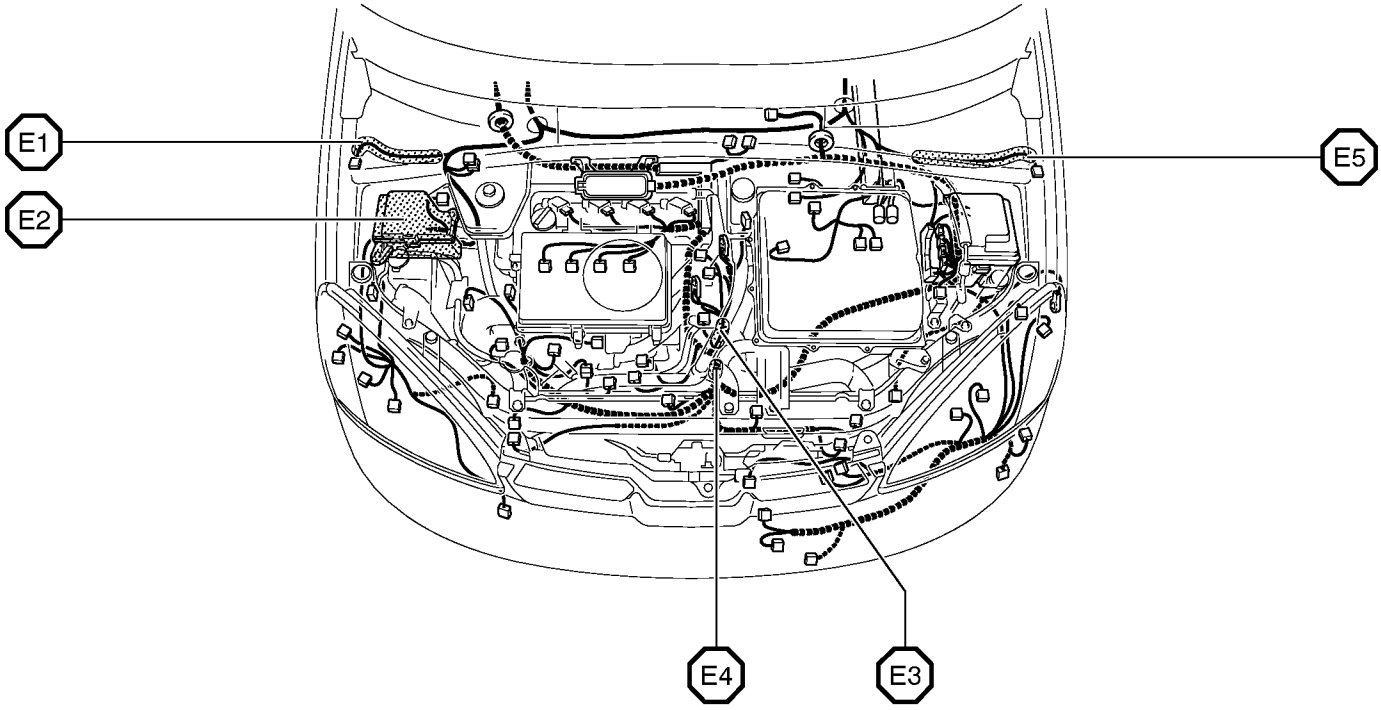

Connector Joining Wire Harness and Wire Harness

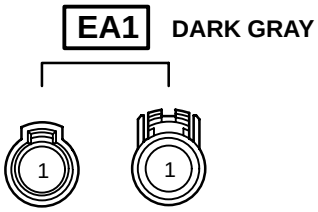

Code	Joining Wire Harness and Wire Harness (Connector Location)
EA1	Engine Wire and Engine No.4 Wire (Near the Radiator Fan)

G ELECTRICAL WIRING ROUTING

▭ : Location of Connector Joining Wire Harness and Wire Harness

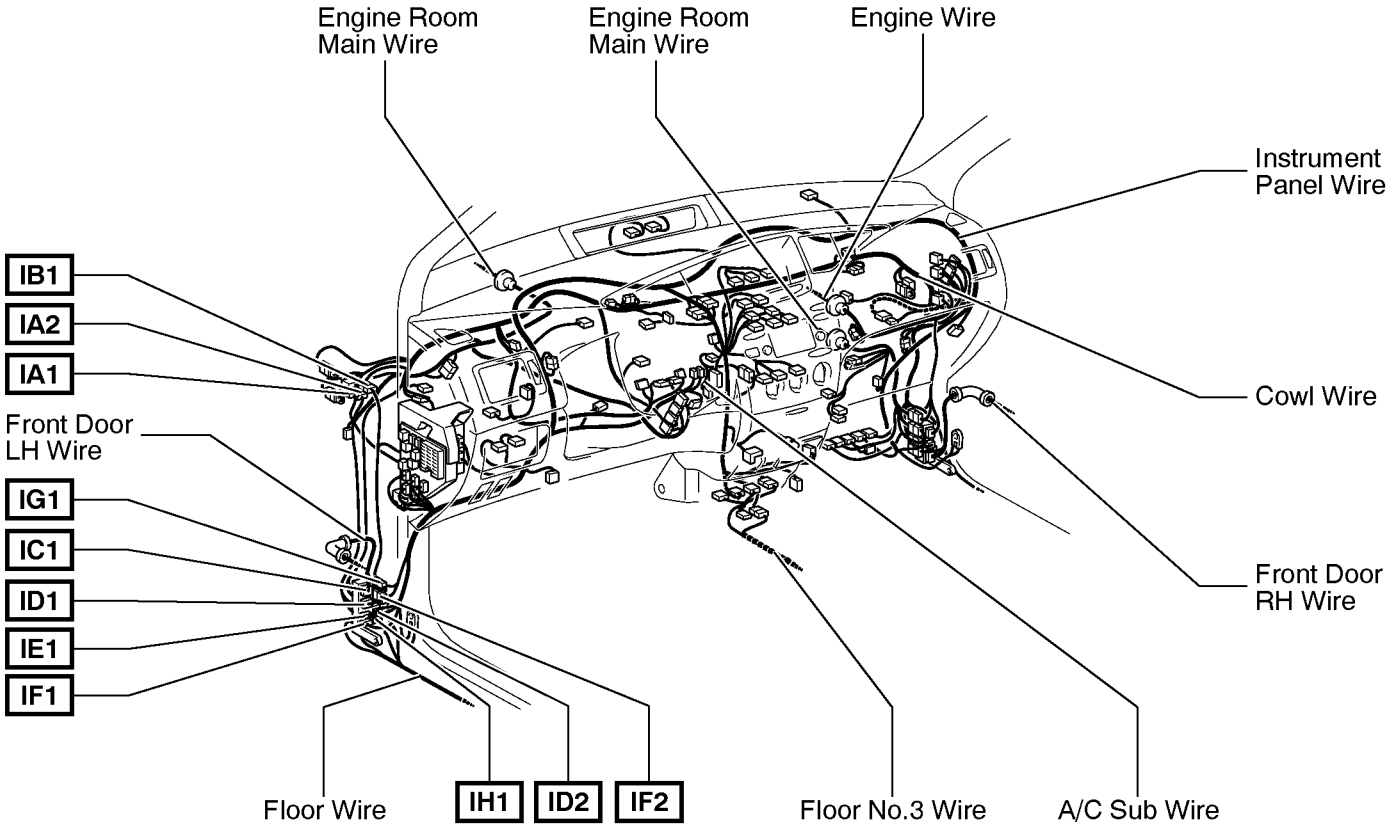

▽ : Location of Ground Points

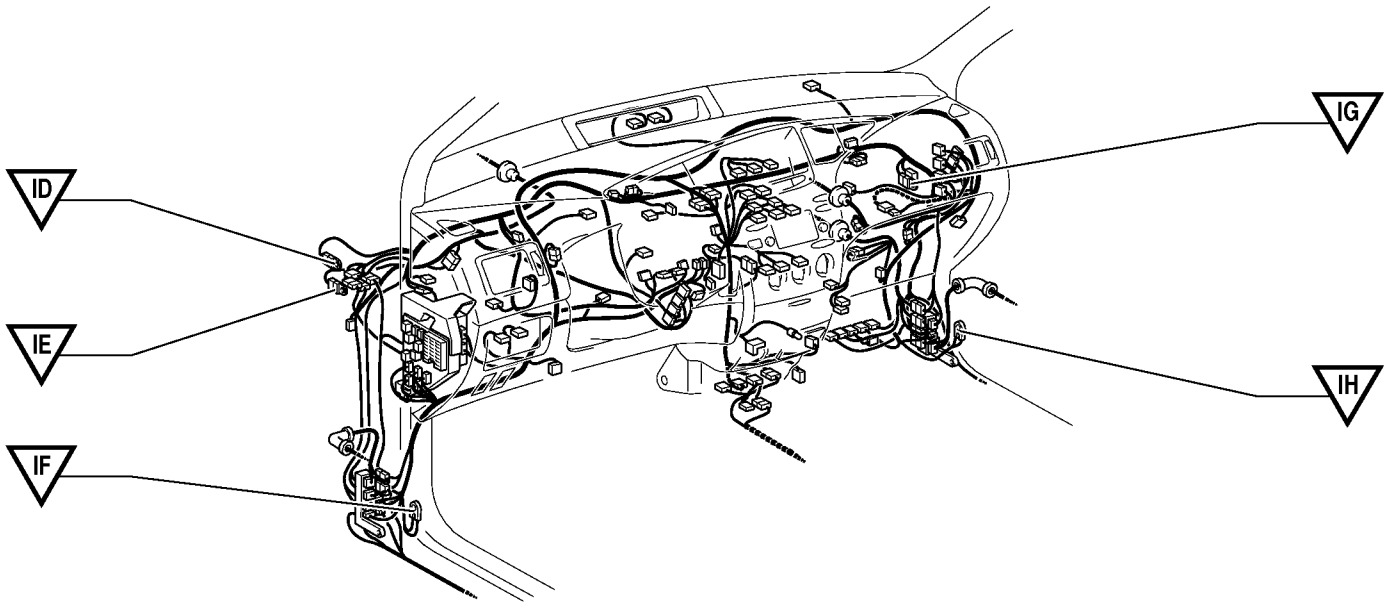

Connector Joining Wire Harness and Wire Harness

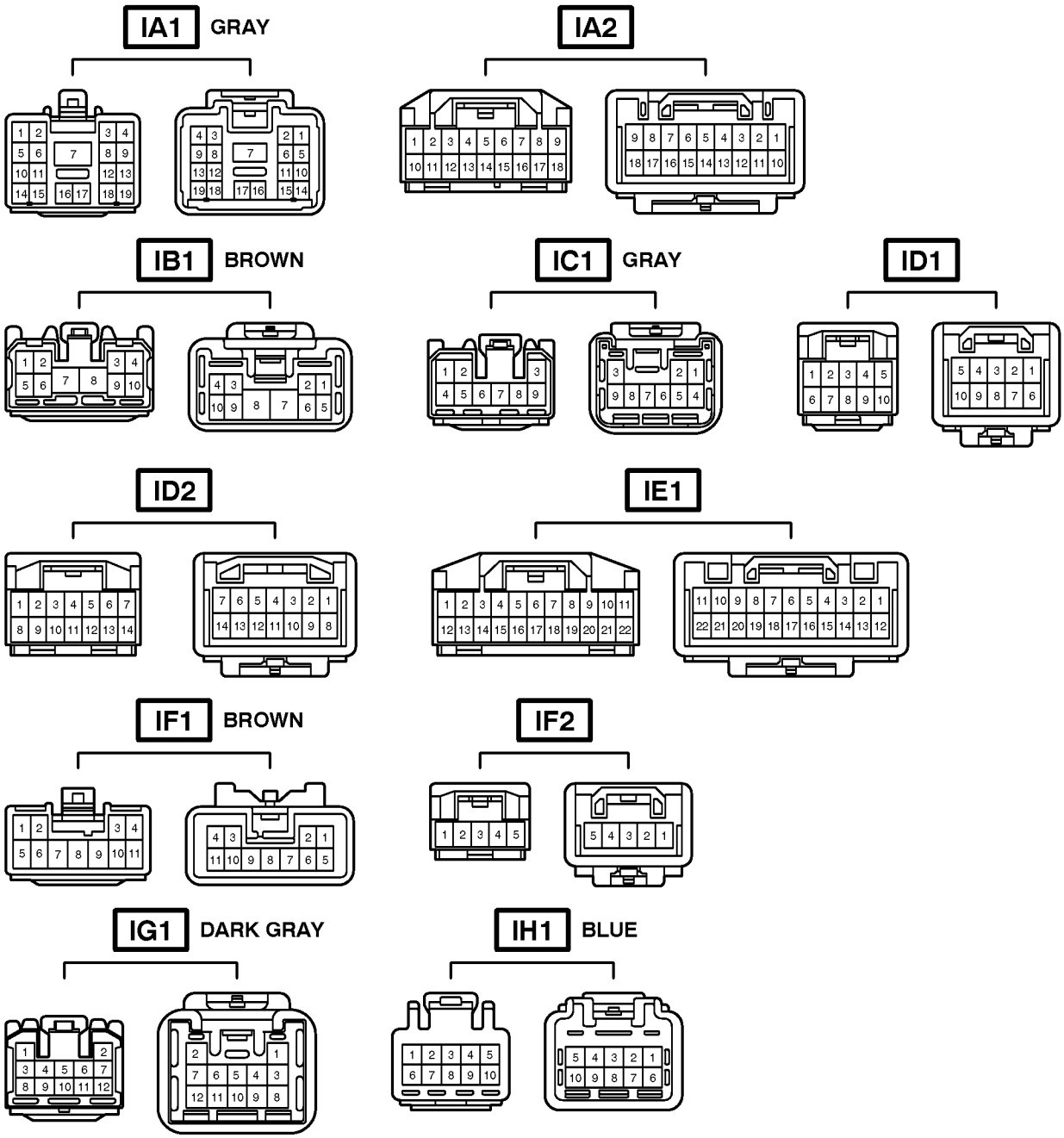

Code	Joining Wire Harness and Wire Harness (Connector Location)
IA1	Engine Room Main Wire and Cowl Wire (Cowl Side Panel LH)
IA2	
IB1	Floor Wire and Cowl Wire (Cowl Side Panel LH)
IC1	Front Door LH Wire and Cowl Wire (Left Kick Panel)
ID1	Instrument Panel Wire and Cowl Wire (Left Kick Panel)
ID2	
IE1	Instrument Panel Wire and Engine Room Main Wire (Left Kick Panel)
IF1	Instrument Panel Wire and Floor Wire (Left Kick Panel)
IF2	
IG1	Front Door LH Wire and Instrument Panel Wire (Left Kick Panel)
IH1	Floor Wire and Engine Room Main Wire (Left Kick Panel)

G ELECTRICAL WIRING ROUTING

: Location of Connector Joining Wire Harness and Wire Harness

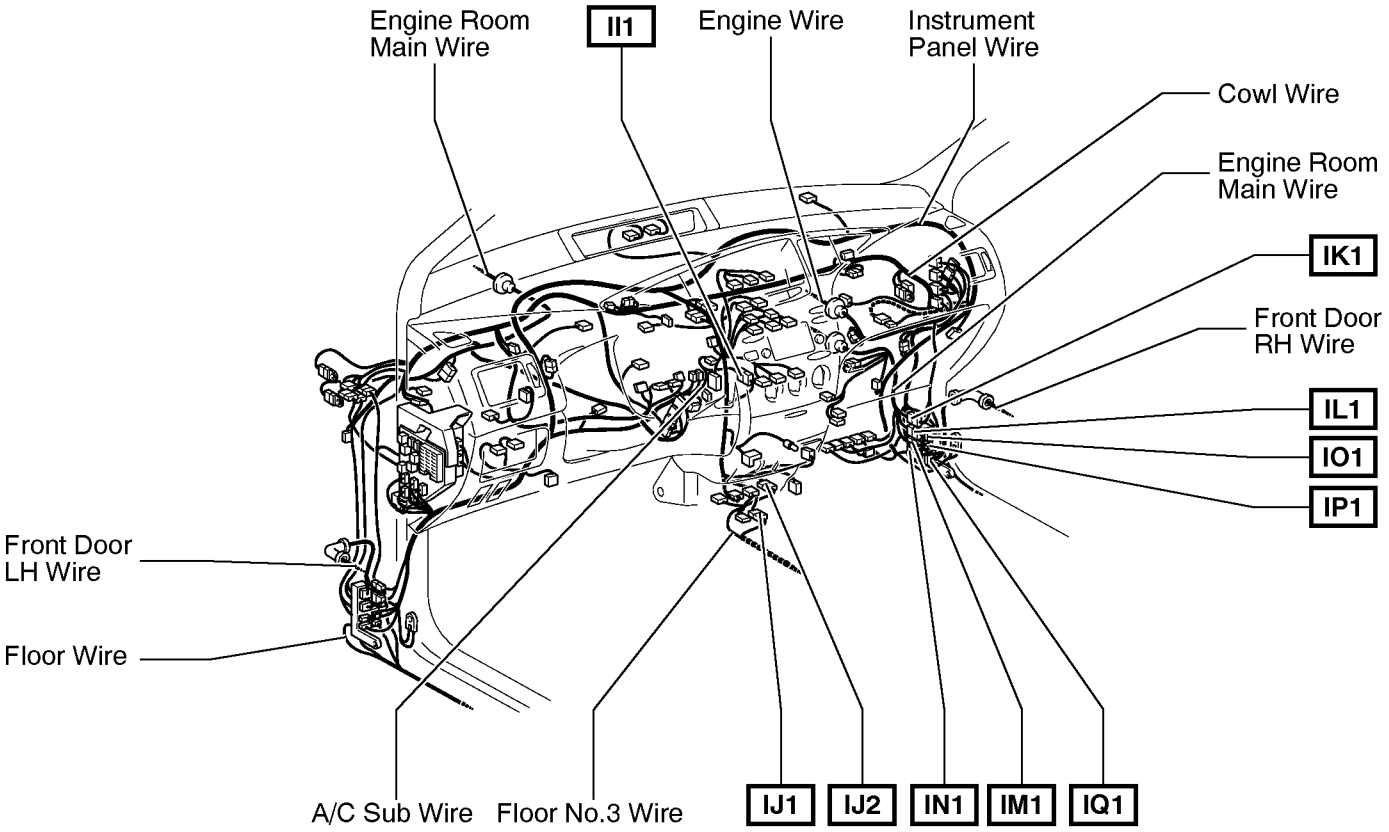

: Location of Splice Points

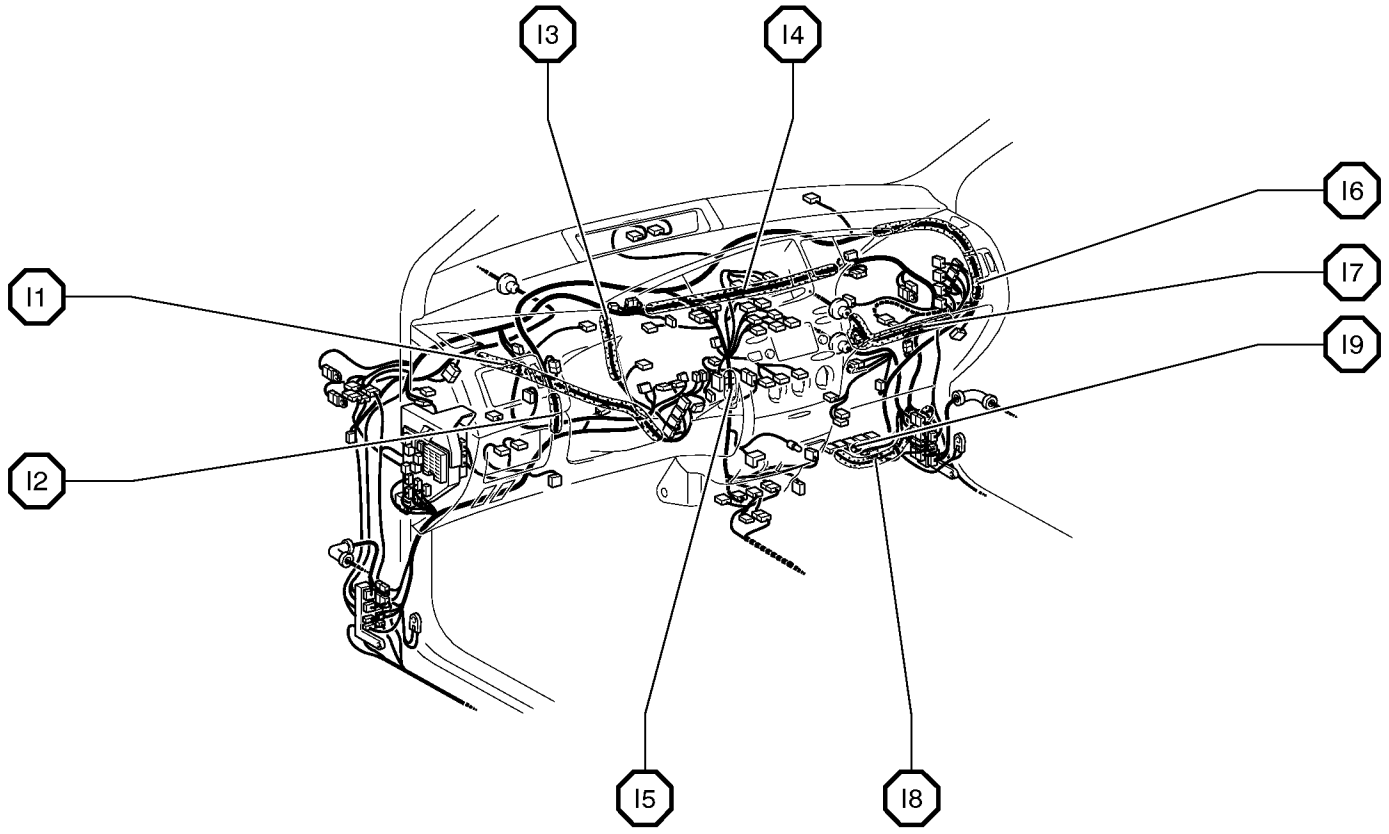

Connector Joining Wire Harness and Wire Harness

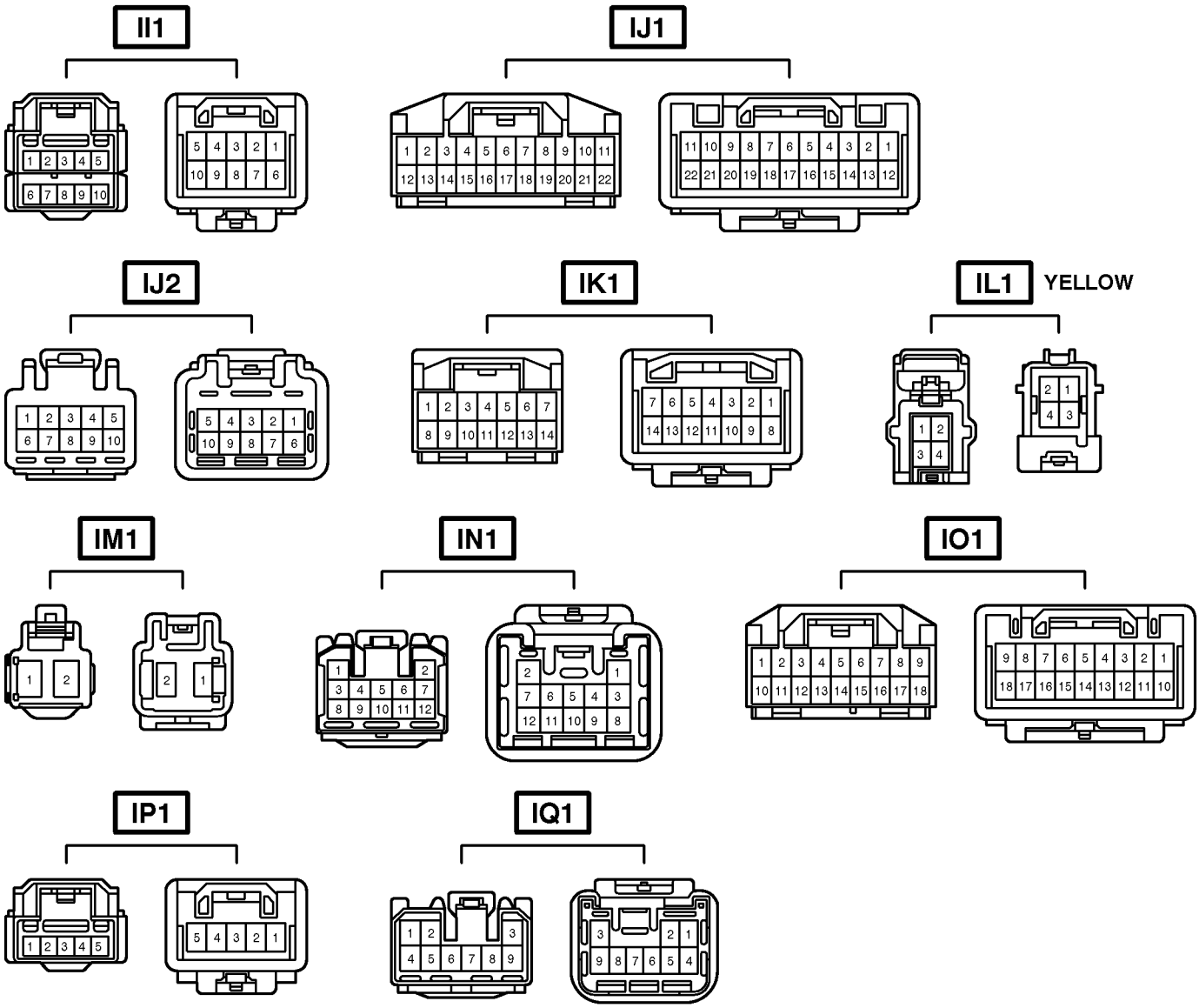

Code	Joining Wire Harness and Wire Harness (Connector Location)
II1	Instrument Panel Wire and A/C Sub Wire (Instrument Panel Brace LH)
IJ1	Floor No.3 Wire and Instrument Panel Wire (Under the Instrument Panel Center)
IJ2	
IK1	Engine Wire and Engine Room Main Wire (Right Kick Panel)
IL1	Instrument Panel Wire and Engine Room Main Wire (Right Kick Panel)
IM1	Engine Room Main Wire and Cowl Wire (Right Kick Panel)
IN1	Front Door RH Wire and Instrument Panel Wire (Right Kick Panel)
IO1	Engine Wire and Cowl Wire (Right Kick Panel)
IP1	Instrument Panel Wire and Cowl Wire (Right Kick Panel)
IQ1	Front Door RH Wire and Cowl Wire (Right Kick Panel)

G ELECTRICAL WIRING ROUTING

: Location of Connector Joining Wire Harness and Wire Harness
: Location of Ground Points

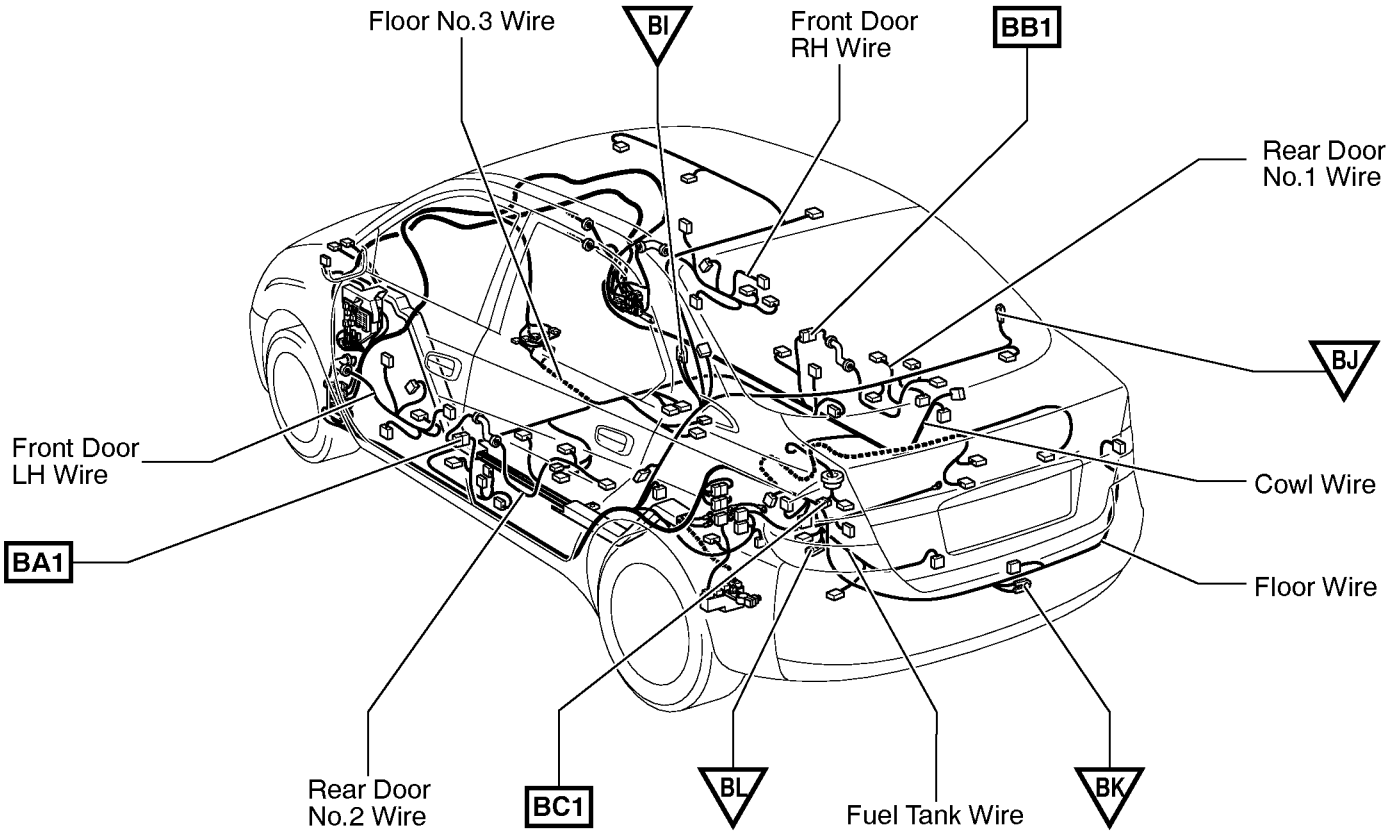

: Location of Splice Points

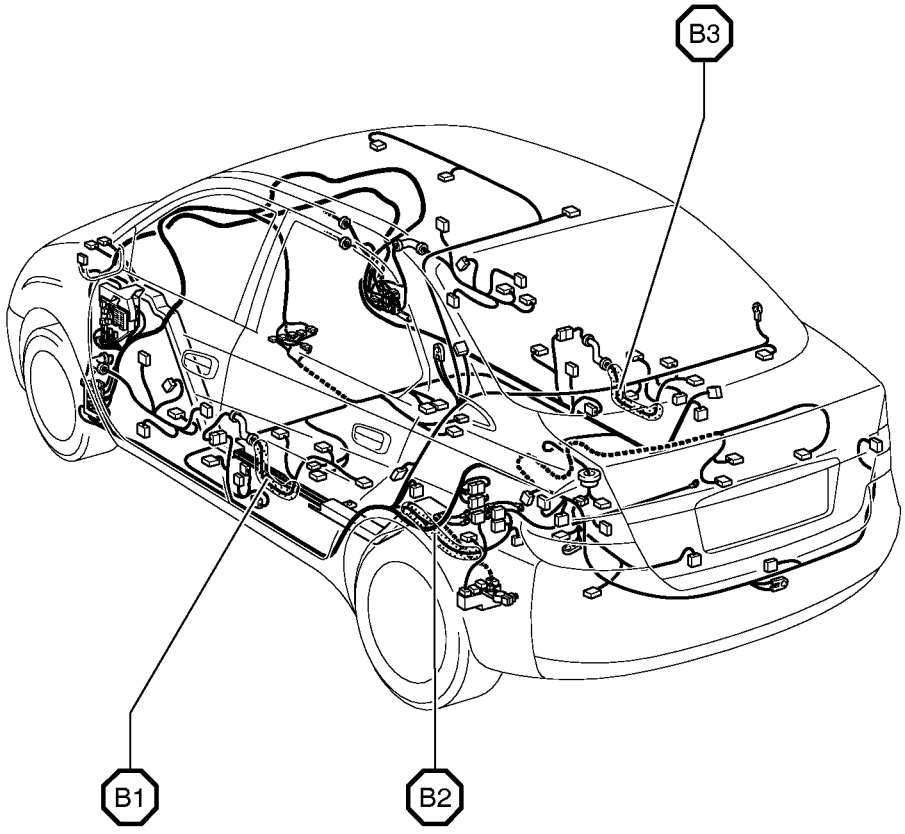

Connector Joining Wire Harness and Wire Harness

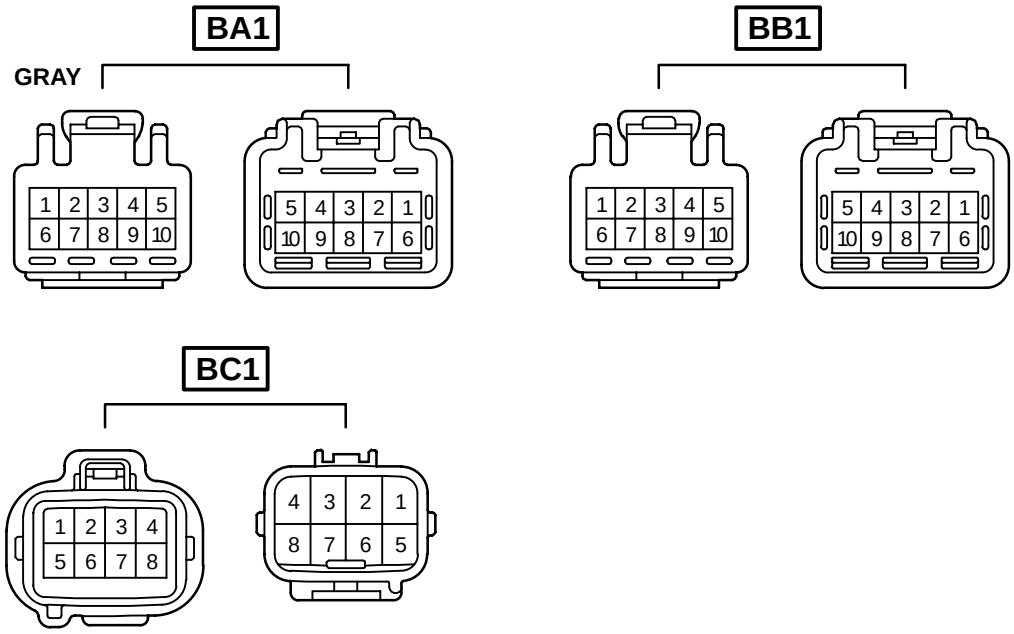

Code	Joining Wire Harness and Wire Harness (Connector Location)
BA1	Rear Door No.2 Wire and Floor Wire (Center Pillar LH)
BB1	Rear Door No.1 Wire and Cowl Wire (Center Pillar RH)
BC1	Cowl Wire and Fuel Tank Wire (Near the Fuel Tank)

POWER SOURCE

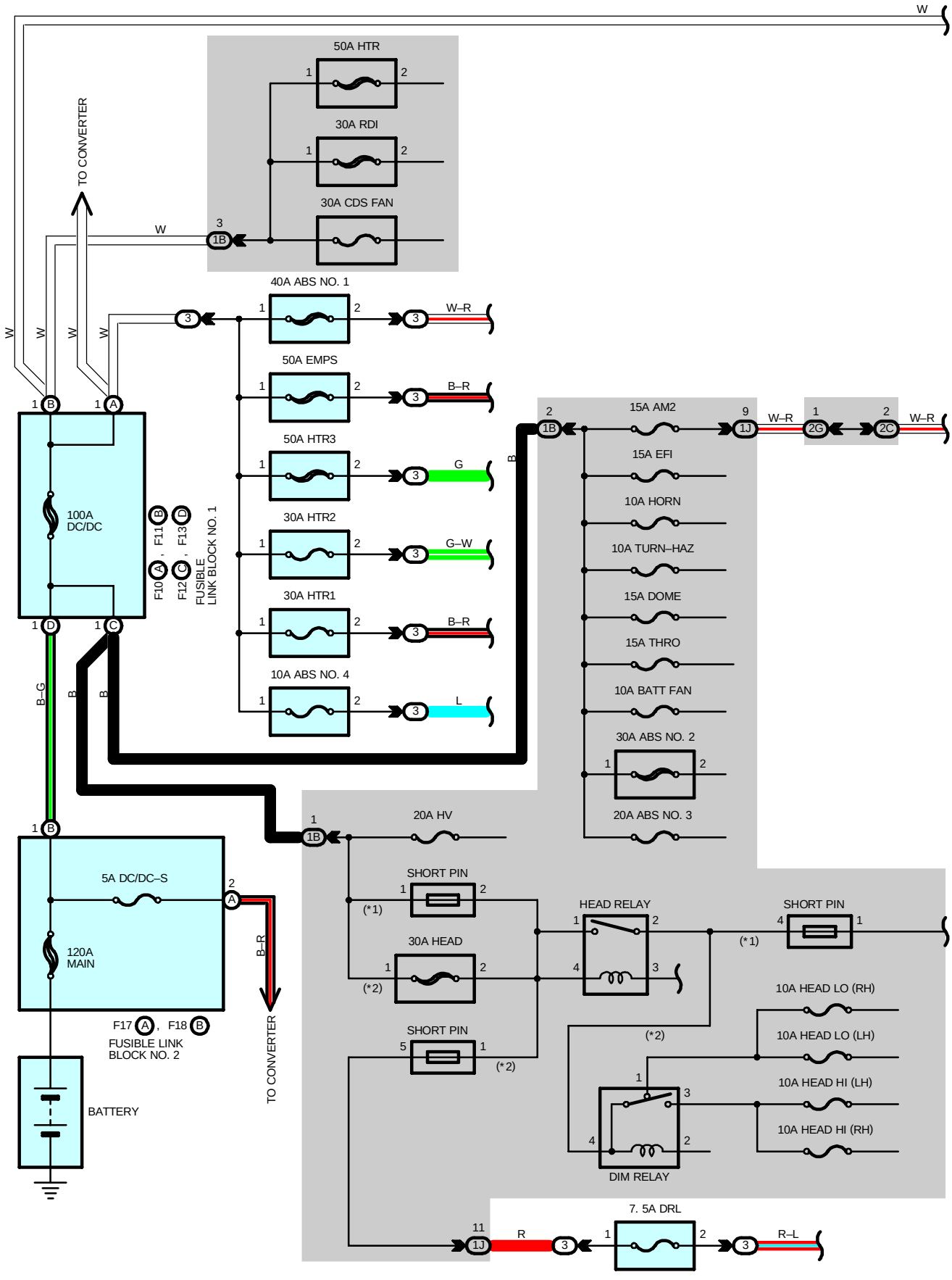

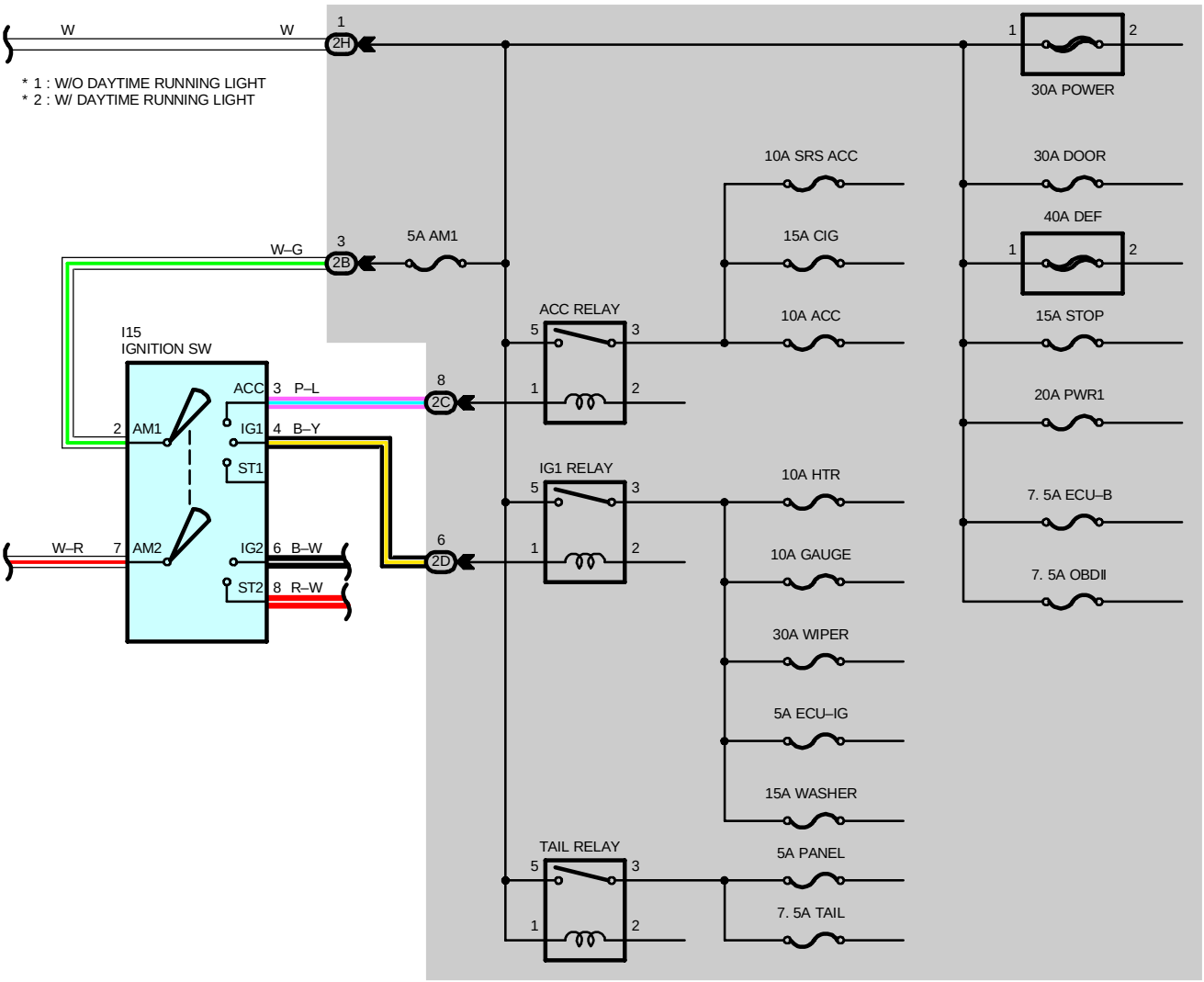
W
W
1
2H
* 1 : W/O DAYTIME RUNNING LIGHT
* 2 : W/ DAYTIME RUNNING LIGHT
1
2
30A POWER
10A SRS ACC
30A DOOR
40A DEF
W–G
3
2B
5A AM1
15A CIG
1
2
ACC RELAY
5
3
10A ACC
15A STOP
I15
IGNITION SW
8
2C
ACC
3
P–L
1
2
20A PWR1
2
AM1
IG1
4
B–Y
ST1
IG1 RELAY
5
3
10A HTR
7. 5A ECU–B
W–R
7
AM2
IG2
6
B–W
6
2D
1
2
10A GAUGE
7. 5A OBDII
ST2
8
R–W
30A WIPER
5A ECU–IG
15A WASHER
TAIL RELAY
5
3
5A PANEL
1
2
7. 5A TAIL

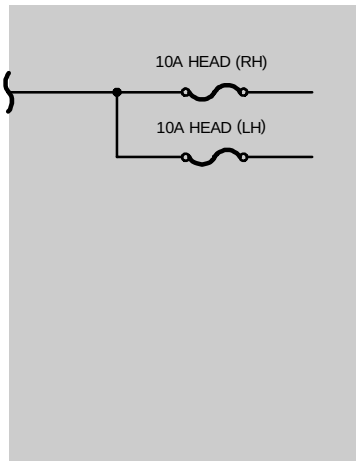
10A HEAD (RH)
10A HEAD (LH)

POWER SOURCE

SERVICE HINTS

HEAD RELAY

2–1 : Closed with the light control SW at **HEAD** position or the dimmer SW at **FLASH** position
Closed with the engine running and the parking brake pedal released (Parking brake SW off) [w/ Daytime running light]

TAIL RELAY

5–3 : Closed with the light control SW at **TAIL** or **HEAD** position

I15 IGNITION SW

2–3 : Closed with the ignition key at **ACC** or **ON** position
2–4 : Closed with the ignition key at **ON** or **ST** position
7–6 : Closed with the ignition key at **ON** or **ST** position
7–8 : Closed with the ignition key at **ST** position

: PARTS LOCATION

Code		See Page	Code		See Page	Code	See Page
F10	A	34	F13	D	34	I15	37
F11	B	34	F17	A	38		
F12	C	34	F18	B	38		

: RELAY BLOCKS

Code	See Page	Relay Blocks (Relay Block Location)
3	24	Engine Room R/B No.3 (Engine Compartment Right)

: JUNCTION BLOCK AND WIRE HARNESS CONNECTOR

Code	See Page	Junction Block and Wire Harness (Connector Location)
1B	27	Engine Room Main Wire and Engine Room J/B (Engine Compartment Left)
1J		
2B	30	Instrument Panel Wire and Instrument Panel J/B (Cowl Side Panel LH)
2C		
2D		
2G	31	Engine Room Main Wire and Instrument Panel J/B (Cowl Side Panel LH)
2H		

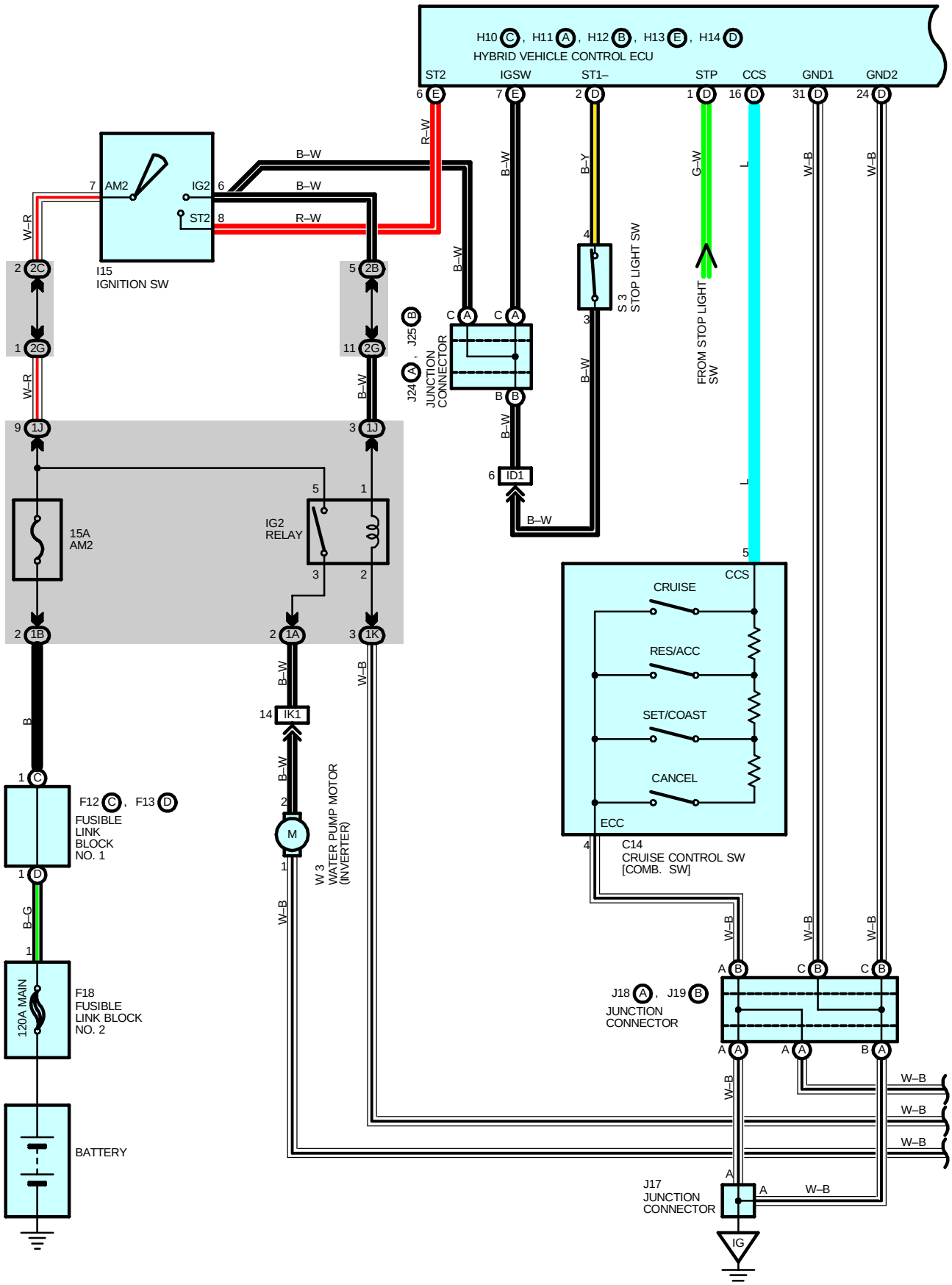
H10 C, H11 A, H12 B, H13 E, H14 D
HYBRID VEHICLE CONTROL ECU
ST2
IGSW
ST1–
STP
CCS
GND1
GND2
I15
IGNITION SW
AM2
IG2
ST2
B–W
R–W
W–R
B–Y
G–W
L
W–B
S 3
STOP LIGHT SW
FROM STOP LIGHT SW
J25, J24
JUNCTION CONNECTOR
ID1
15A
AM2
IG2
RELAY
IK1
W 3
WATER PUMP MOTOR
(INVERTER)
CRUISE
RES/ACC
SET/COAST
CANCEL
ECC
C14
CRUISE CONTROL SW
[COMB. SW]
F12 C, F13 D
FUSIBLE
LINK
BLOCK
NO. 1
B–G
120A MAIN
F18
FUSIBLE
LINK BLOCK
NO. 2
BATTERY
J18 A, J19 B
JUNCTION
CONNECTOR
J17
JUNCTION
CONNECTOR
IG

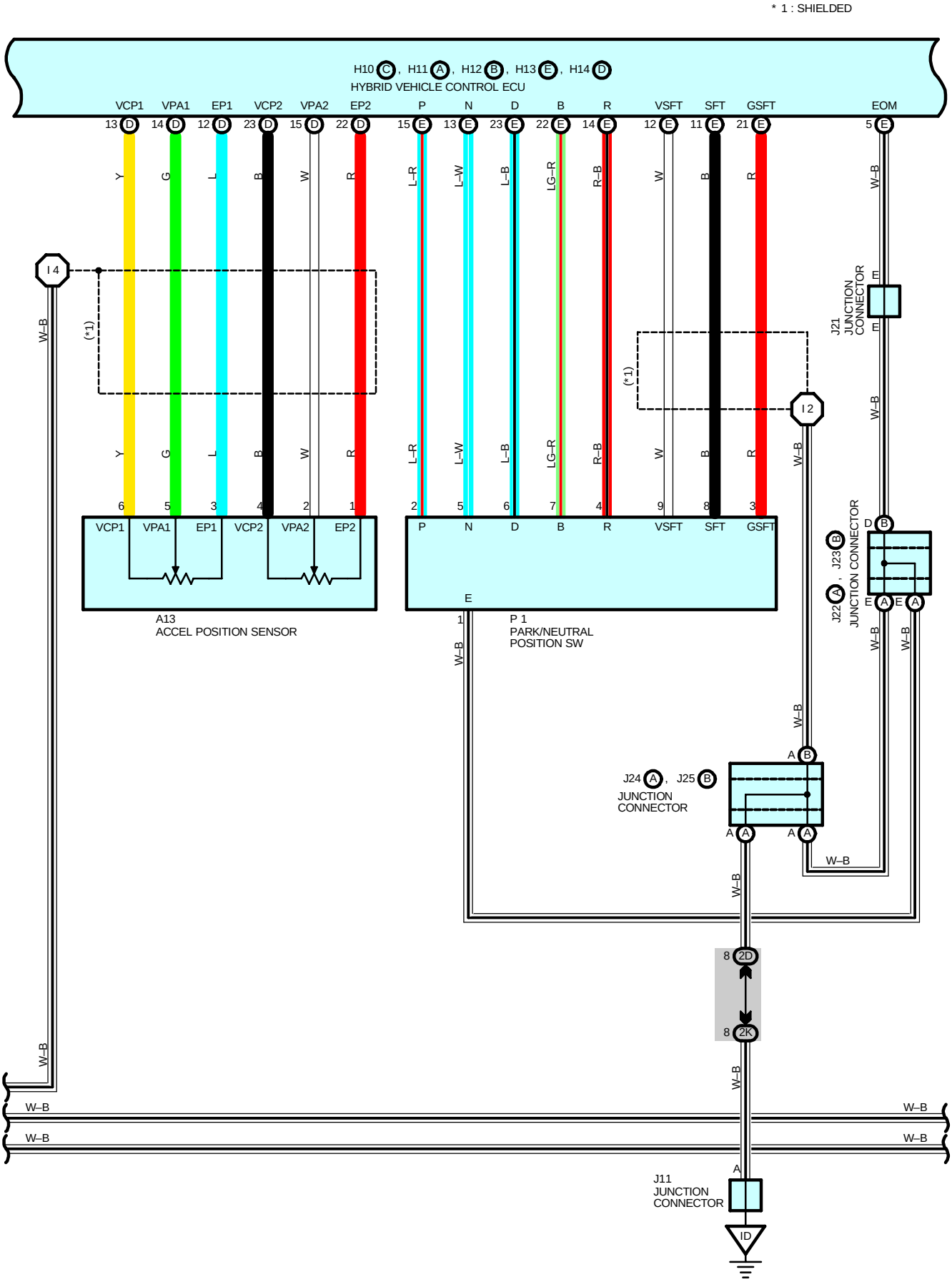
* 1 : SHIELDED
H10 C , H11 A , H12 B , H13 E , H14 D
HYBRID VEHICLE CONTROL ECU
VCP1 VPA1 EP1 VCP2 VPA2 EP2 P N D B R VSFT SFT GSFT EOM
I 4
I 2
(*1)
J21 JUNCTION CONNECTOR
J22 , J23 JUNCTION CONNECTOR
A13
ACCEL POSITION SENSOR
P 1
PARK/NEUTRAL POSITION SW
J24 , J25
JUNCTION CONNECTOR
2D
2K
J11 JUNCTION CONNECTOR
ID
W–B
Y
G
L
B
W
R
L–R
L–W
L–B
LG–R
R–B

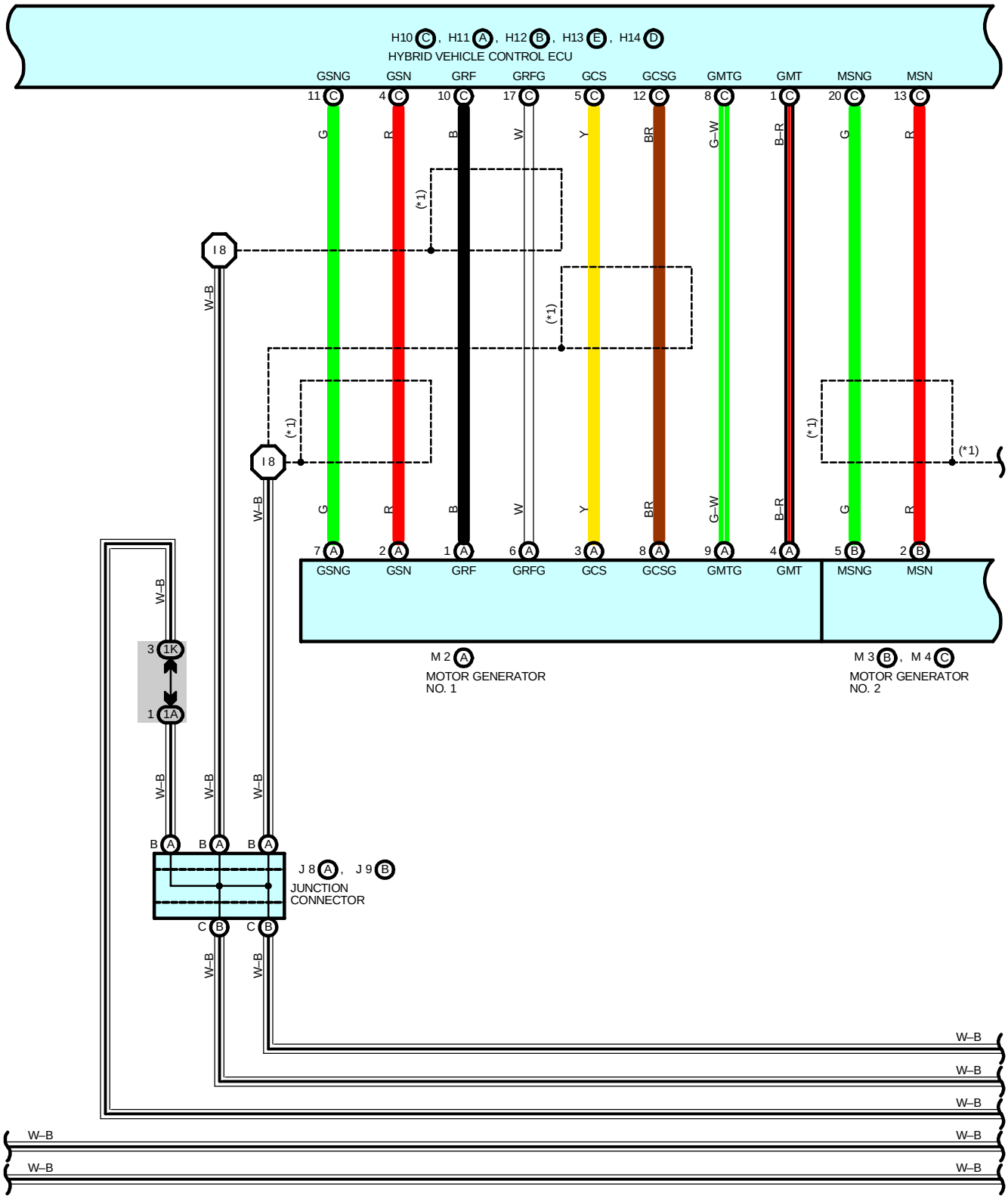
H10 C, H11 A, H12 B, H13 E, H14 D
HYBRID VEHICLE CONTROL ECU
GSNG
GSN
GRF
GRFG
GCS
GCSG
GMTG
GMT
MSNG
MSN
11 C
4 C
10 C
17 C
5 C
12 C
8 C
1 C
20 C
13 C
G
R
B
W
Y
BR
G–W
B–R
G
R
(*1)
I 8
W–B
7 A
2 A
1 A
6 A
3 A
8 A
9 A
4 A
5 B
2 B
M 2 A
MOTOR GENERATOR NO. 1
M 3 B, M 4 C
MOTOR GENERATOR NO. 2
3 1K
1 1A
B A
C B
J 8 A, J 9 B
JUNCTION CONNECTOR

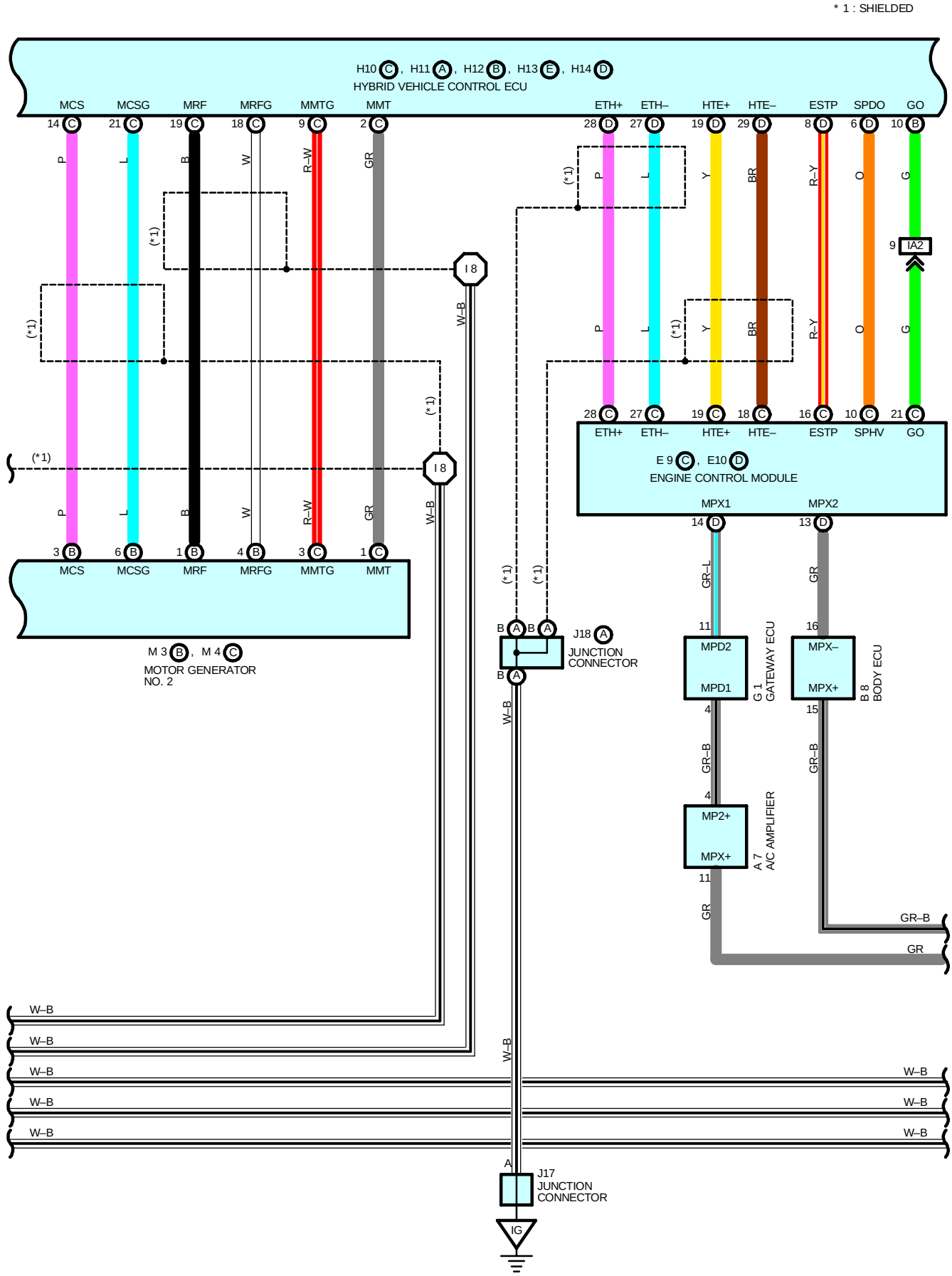
* 1 : SHIELDED
H10 C , H11 A , H12 B , H13 E , H14 D
HYBRID VEHICLE CONTROL ECU
MCS
MCSG
MRF
MRFG
MMTG
MMT
ETH+
ETH–
HTE+
HTE–
ESTP
SPDO
GO
14 C
21 C
19 C
18 C
9 C
2 C
28 D
27 D
19 D
29 D
8 D
6 D
10 B
P
L
B
W
R–W
GR
Y
BR
R–Y
O
G
(*1)
I 8
W–B
9 IA2
28 C
27 C
19 C
18 C
16 C
10 C
21 C
ETH+
ETH–
HTE+
HTE–
ESTP
SPHV
GO
E 9 C , E10 D
ENGINE CONTROL MODULE
MPX1
MPX2
14 D
13 D
GR–L
GR
11
16
MPD2
MPD1
MPX–
MPX+
G 1
GATEWAY ECU
B 8
BODY ECU
4
15
GR–B
MP2+
MPX+
A 7
A/C AMPLIFIER
3 B
6 B
1 B
4 B
3 C
1 C
MCS
MCSG
MRF
MRFG
MMTG
MMT
M 3 B , M 4 C
MOTOR GENERATOR
NO. 2
B A B A
J18 A
JUNCTION
CONNECTOR
B A
W–B
A
J17
JUNCTION
CONNECTOR
IG

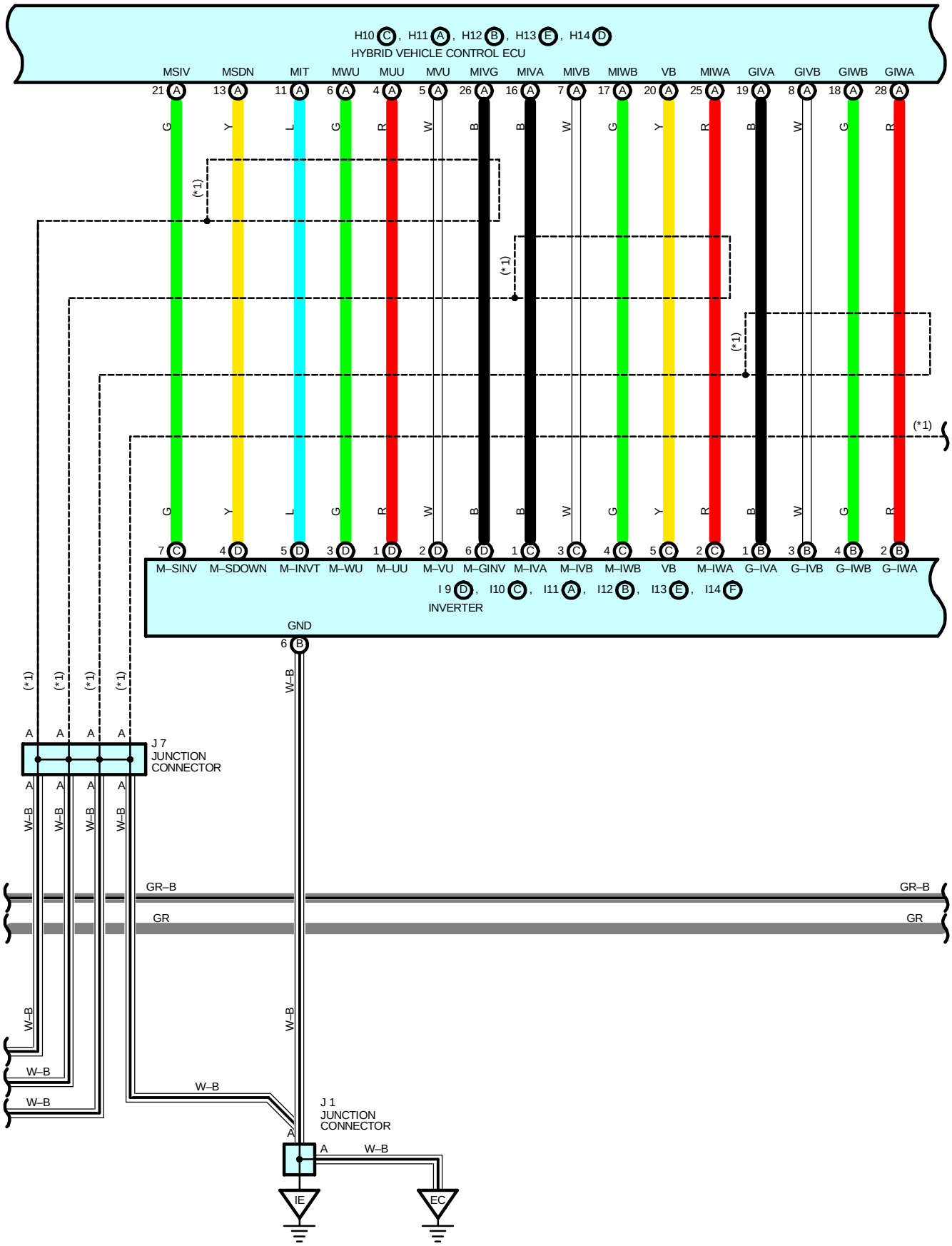
H10 C , H11 A , H12 B , H13 E , H14 D
HYBRID VEHICLE CONTROL ECU
MSIV MSDN MIT MWU MUU MVU MIVG MIVA MIVB MIWB VB MIWA GIVA GIVB GIWB GIWA
M–SINV M–SDOWN M–INVT M–WU M–UU M–VU M–GINV M–IVA M–IVB M–IWB VB M–IWA G–IVA G–IVB G–IWB G–IWA
I 9 D , I10 C , I11 A , I12 B , I13 E , I14 F
INVERTER
(*1)
GND
J 7
JUNCTION
CONNECTOR
J 1
JUNCTION
CONNECTOR
W–B
GR–B
GR
IE
EC

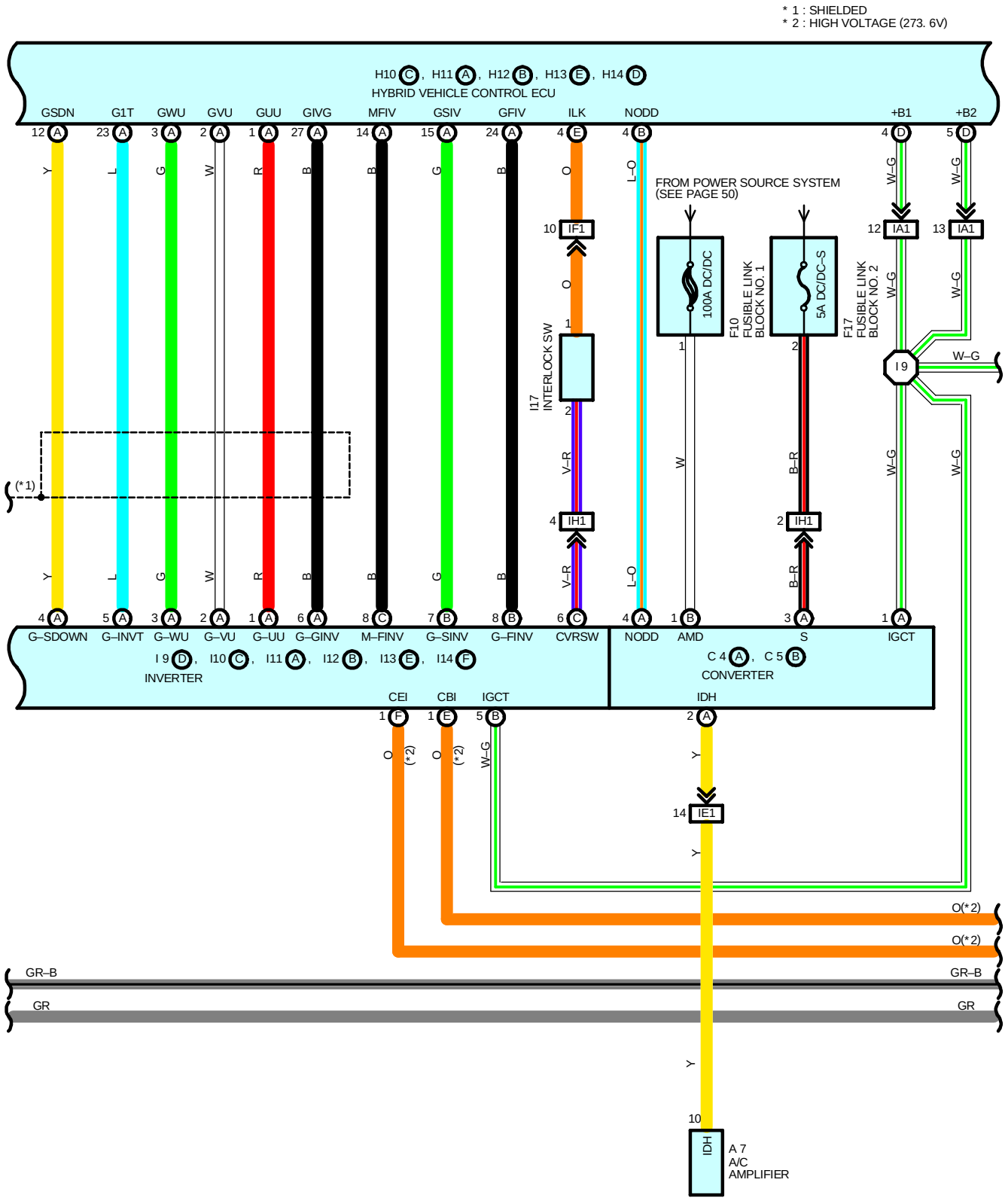
* 1 : SHIELDED
* 2 : HIGH VOLTAGE (273. 6V)
H10 C , H11 A , H12 B , H13 E , H14 D
HYBRID VEHICLE CONTROL ECU
GSDN G1T GWU GVU GUU GIVG MFIV GSIV GFIV ILK NODD +B1 +B2
FROM POWER SOURCE SYSTEM (SEE PAGE 50)
100A DC/DC
F10 FUSIBLE LINK BLOCK NO. 1
5A DC/DC–S
F17 FUSIBLE LINK BLOCK NO. 2
I17 INTERLOCK SW
I 9
(*1)
G–SDOWN G–INVT G–WU G–VU G–UU G–GINV M–FINV G–SINV G–FINV CVRSW NODD AMD S IGCT
I 9 D , I10 C , I11 A , I12 B , I13 E , I14 F
INVERTER
C 4 A , C 5 B
CONVERTER
CEI CBI IGCT IDH
O(*2)
GR–B
GR
IDH
A 7
A/C
AMPLIFIER

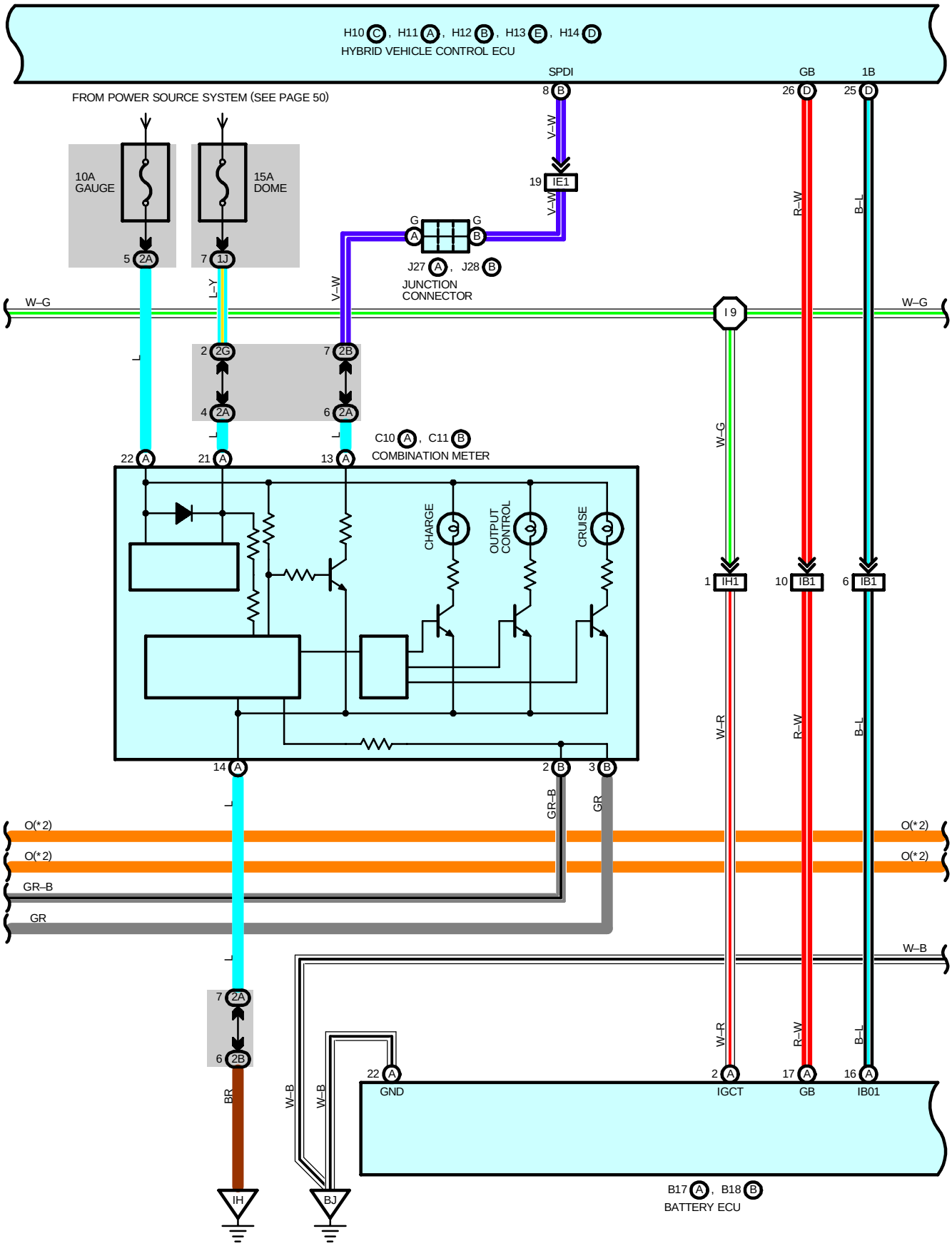
H10 C, H11 A, H12 B, H13 E, H14 D
HYBRID VEHICLE CONTROL ECU
SPDI
GB
1B
FROM POWER SOURCE SYSTEM (SEE PAGE 50)
8 B
26 D
25 D
V–W
R–W
B–L
10A GAUGE
15A DOME
19 IE1
G
G
A
B
J27 A, J28 B
JUNCTION CONNECTOR
5 2A
7 1J
L–Y
V–W
W–G
W–G
I 9
2 2G
7 2B
4 2A
6 2A
L
C10 A, C11 B
COMBINATION METER
22 A
21 A
13 A
W–G
CHARGE
OUTPUT CONTROL
CRUISE
1 IH1
10 IB1
6 IB1
W–R
R–W
B–L
14 A
2 B
3 B
GR–B
GR
O(*2)
O(*2)
GR–B
GR
O(*2)
O(*2)
W–B
7 2A
6 2B
BR
W–B
W–B
22 A
GND
2 A
IGCT
17 A
GB
16 A
IB01
IH
BJ
B17 A, B18 B
BATTERY ECU

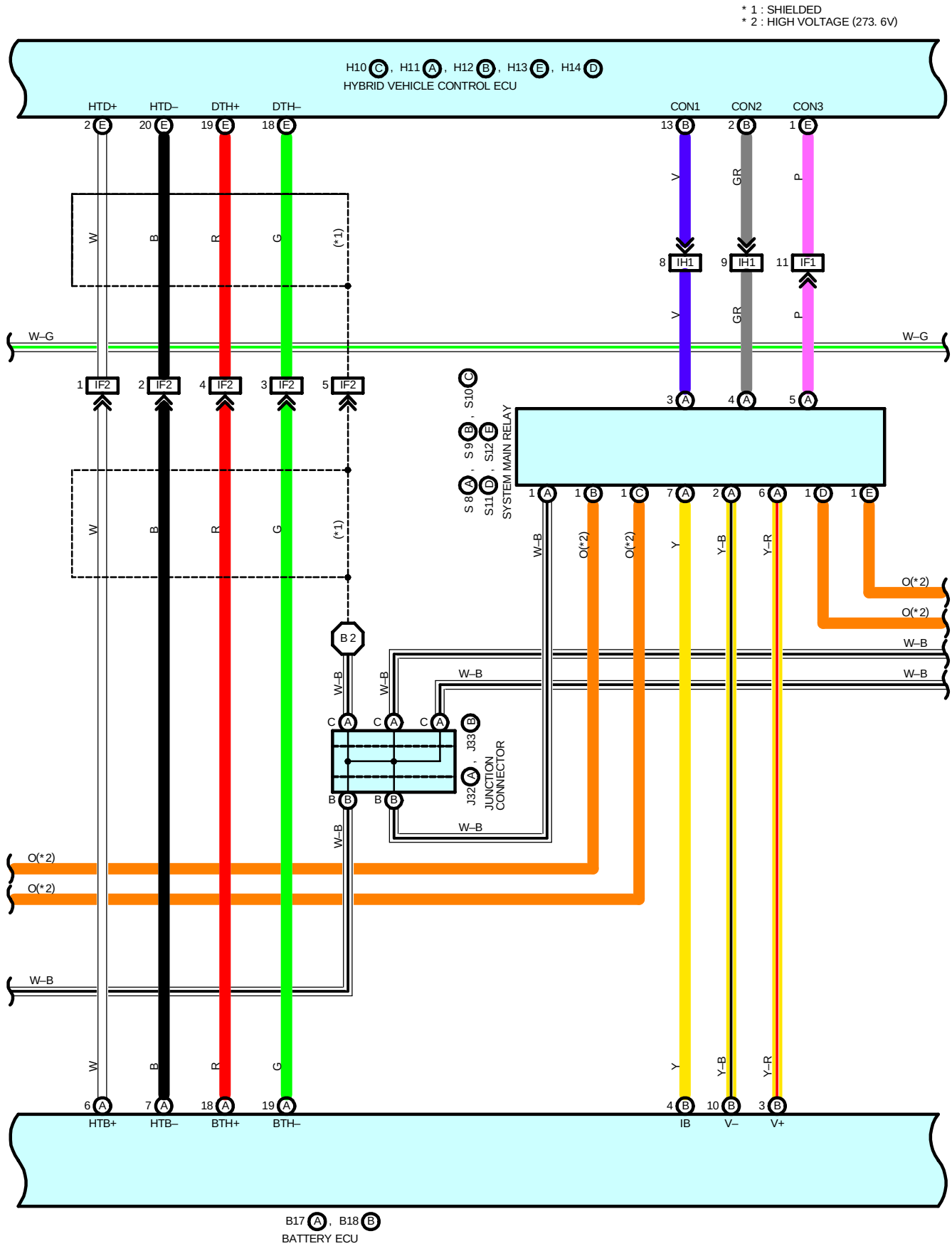
* 1 : SHIELDED
* 2 : HIGH VOLTAGE (273. 6V)
H10 C , H11 A , H12 B , H13 E , H14 D
HYBRID VEHICLE CONTROL ECU
HTD+
HTD–
DTH+
DTH–
CON1
CON2
CON3
W–G
SYSTEM MAIN RELAY
JUNCTION CONNECTOR
B 2
O(*2)
W–B
Y
Y–B
Y–R
HTB+
HTB–
BTH+
BTH–
IB
V–
V+
B17 A , B18 B
BATTERY ECU

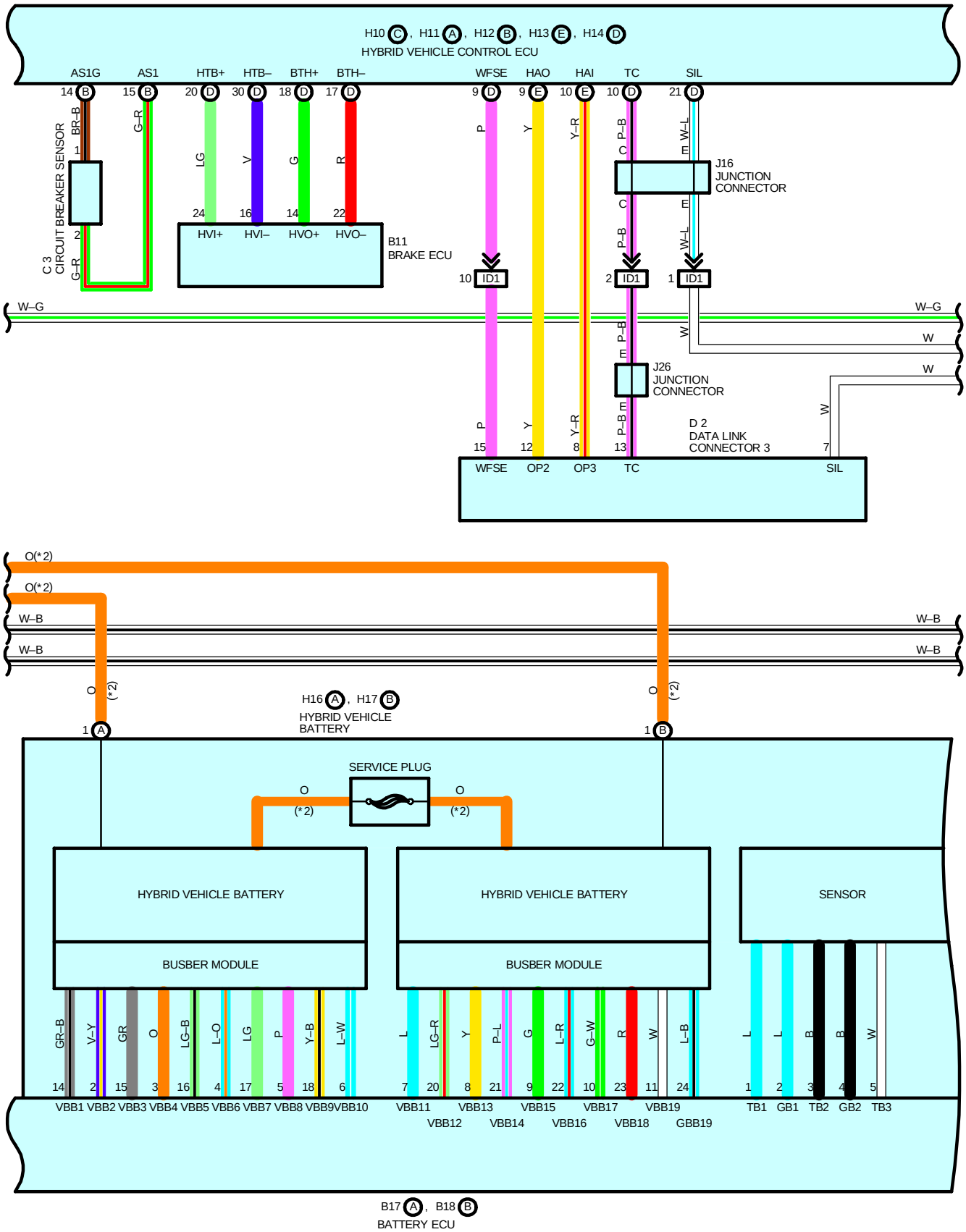
H10 C, H11 A, H12 B, H13 E, H14 D
HYBRID VEHICLE CONTROL ECU
AS1G
AS1
HTB+
HTB–
BTH+
BTH–
WFSE
HAO
HAI
TC
SIL
C 3
CIRCUIT BREAKER SENSOR
BR–B
G–R
LG
V
G
R
HVI+
HVI–
HVO+
HVO–
B11
BRAKE ECU
J16
JUNCTION
CONNECTOR
P
Y
Y–R
P–B
W–L
ID1
W–G
W
J26
JUNCTION
CONNECTOR
D 2
DATA LINK
CONNECTOR 3
O(*2)
W–B
H16 A, H17 B
HYBRID VEHICLE
BATTERY
SERVICE PLUG
HYBRID VEHICLE BATTERY
BUSBER MODULE
SENSOR
GR–B
V–Y
GR
O
LG–B
L–O
LG
P
Y–B
L–W
L
LG–R
Y
P–L
G
L–R
G–W
R
W
L–B
B
VBB1 VBB2 VBB3 VBB4 VBB5 VBB6 VBB7 VBB8 VBB9 VBB10
VBB11 VBB12 VBB13 VBB14 VBB15 VBB16 VBB17 VBB18 VBB19 GBB19
TB1 GB1 TB2 GB2 TB3
B17 A, B18 B
BATTERY ECU

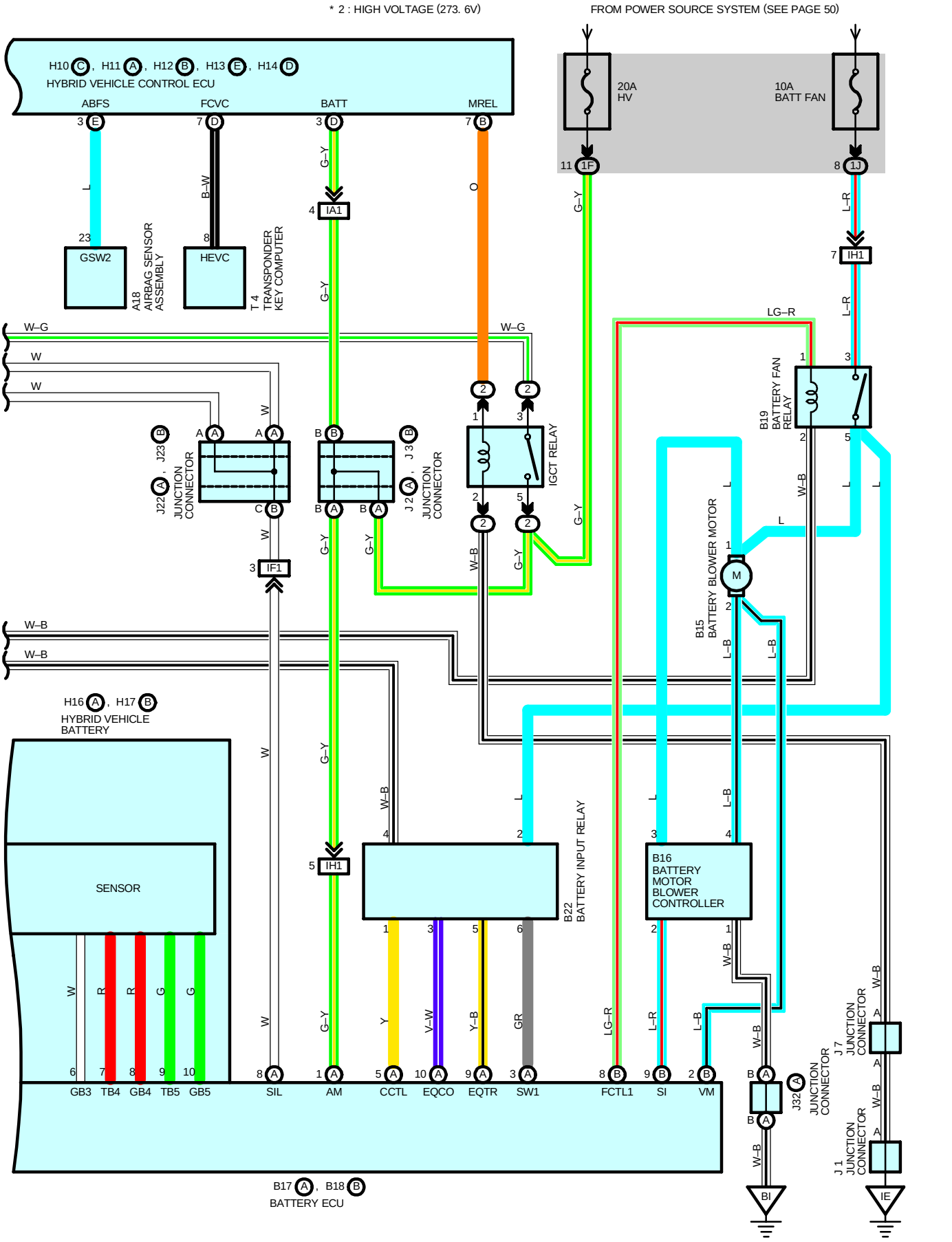
* 2 : HIGH VOLTAGE (273. 6V)
FROM POWER SOURCE SYSTEM (SEE PAGE 50)
H10 C , H11 A , H12 B , H13 E , H14 D
HYBRID VEHICLE CONTROL ECU
ABFS
FCVC
BATT
MREL
20A HV
10A BATT FAN
GSW2
A18 AIRBAG SENSOR ASSEMBLY
HEVC
T 4 TRANSPONDER KEY COMPUTER
IA1
IH1
IF1
IGCT RELAY
B19 BATTERY FAN RELAY
B15 BATTERY BLOWER MOTOR
J22 , J23 JUNCTION CONNECTOR
J 2 , J 3 JUNCTION CONNECTOR
H16 A , H17 B
HYBRID VEHICLE BATTERY
SENSOR
B22 BATTERY INPUT RELAY
B16 BATTERY MOTOR BLOWER CONTROLLER
GB3 TB4 GB4 TB5 GB5
SIL AM CCTL EQCO EQTR SW1 FCTL1 SI VM
J32 JUNCTION CONNECTOR
J 7 JUNCTION CONNECTOR
J 1 JUNCTION CONNECTOR
BI
IE
B17 A , B18 B
BATTERY ECU

SYSTEM OUTLINE

FEATURES OF TOYOTA HYBRID SYSTEM

This system controls the following modes in order to achieve the most efficient operations to match the driving conditions.

(1) Supply of electrical power from the HV battery to motor generator no.2 provides force to drive the wheels.

(2) While the tires are driven by the engine via the planetary gears, motor generator no.1 is driven via the planetary gears to supply electricity to motor generator no.2 to drive the wheels.

(3) When the vehicle is decelerating, kinetic energy from the wheels is recovered and converted into electrical energy and used to recharge the HV battery by means of motor generator no.2.

The hybrid vehicle control ECU switches between these modes (1, 2, 1+2, or 3) according to the driving conditions. However, when the state of charge of the HV battery is low, the HV battery is charged by the engine by turning motor generator no.1.

CRUISE CONTROL OPERATION

Cruise control is the speed control device, which sets the desired speed by just operating the switch on the control panel without pressing the accelerator pedal. This device is used when you would like to drive the vehicle at the fixed speed.

1. SET CONTROL

If you operate the SET/COAST switch when driving (The available range of set speed: between about 40 and 200 km/h) with the main switch is ON (When power indicator comes on), the device memorizes vehicle's speed when switch is off and controls the fixed speed.

2. SET SPEED CONTROL

This device compares the vehicle's running speed and the memorized speed, and controls the driving power of the motor and the engine by calculating the cruise control requirements so that both speed become equivalent.

3. COAST CONTROL

If the SET/COAST switch is continued to be ON during the running with the cruise control, the device recognizes the cruise control requirement is at 0 and decelerates the vehicle's speed. Then the device memorizes the speed when the switch is off in order to control the fixed speed.

In each time you operate SET/COAST switch momentarily (For about 0.5 second), the memorized speed is decreased in about 1.5 km/h. However, in case of the tap–down operation with more than 5–km/h gap between the memorized speed and vehicle's running speed, the device memorizes the vehicle's speed when the switch is off and controls the fixed speed.

4. ACCEL CONTROL

If the RESUME/ACCEL switch is continued to be ON during the running with the cruise control, the device recognizes the cruise control is on the acceleration side and accelerates the vehicle's speed. Then the running speed when the switch is off is memorized to control the fixed speed.

In each time you operate RESUME/ACCEL switch momentarily (For about 0.5 second), the memorized speed is increased in about 1.5 km/h. However, if there is more than 5–km/h gap between the memorized speed and vehicle's running speed, this operation does not change the memorized speed. (Tap–up operation is not available.)

5. RESUME CONTROL

If the running speed is faster than the low speed limit after the cruise control is canceled manually, the fixed speed is controlled by the OFF–ON operation of RESUME/ACCEL switch, so that the vehicle's speed returns to the memorized speed at the time the cruise control is released.

6. MANUAL CANCEL CONTROL

When each of the following signals is input during driving with cruise control, the cruise control is released with turning the cruise control requirement to 0. (The memorized speed is maintained when following signals except the signal, main switch OFF is input.)

* Stop light switch ON (Pressing the brake pedal)
* Control switch's cancel switch ON
* Main switch OFF

7. AUTO CANCEL FUNCTION

A) The memorized speed is erased and the control is canceled if the following conditions occur. The power indicator blinks at that time until the main switch is turned ON. The speed control is unavailable unless the main switch is turned ON again.

* When the stop light switch breaks or short–circuits.
* When sudden change of the running speed signal occur.

B) The memorized speed is erased and the control is canceled if the following conditions occur.

* When the malfunction of the stop light switch input circuit occurs.
* When the running speed becomes slower than 40km/h.
* When the running speed becomes slower than the speed that 16 km/h subtracted from the memorized speed.

8. REGENERATIVE SYSTEM OPERATION

This system operates the motor as a generator to change the kinetic energy of the vehicle into the electricity when accel pedal release or foot braking controls the vehicle, and store the electricity in the battery.

SERVICE HINTS

C14 CRUISE CONTROL SW [COMB. SW]

5–4 : Approx. **1540** Ω with CANCEL SW on
Approx. **240** Ω with RES/ACC SW on
Approx. **630** Ω with SET/COAST SW on

○ : PARTS LOCATION

Code	See Page	Code	See Page	Code	See Page
A7	36	G1	37	J18 A	37
A13	36	H10 C	37	J19 B	37
A18	36	H11 A	37	J21	37
B8	36	H12 B	37	J22 A	37
B11	36	H13 E	37	J23 B	37
B15	38	H14 D	37	J24 A	37
B16	38	H16 A	38	J25 B	37
B17 A	38	H17 B	38	J26	37
B18 B	38	I9 D	35	J27 A	37
B19	38	I10 C	35	J28 B	37
B22	38	I11 A	35	J32 A	38
C3	34	I12 B	35	J33 B	38
C4 A	34	I13 E	35	M2 A	35
C5 B	34	I14 F	35	M3 B	35
C10 A	36	I15	37	M4 C	35
C11 B	36	I17	38	P1	37
C14	36	J1	37	S3	37
D2	36	J2 A	37	S8 A	39
E9 C	36	J3 B	37	S9 B	39
E10 D	36	J7	37	S10 C	39
F10	34	J8 A	37	S11 D	39
F12 D	34	J9 B	37	S12 E	39
F13 C	34	J11	37	T4	37
F17	38	J16	37	W3	35
F18	38	J17	37		

: RELAY BLOCKS

Code	See Page	Relay Blocks (Relay Block Location)
2	23	Engine Room R/B No.2 (Right Side of Reserve Tank)

: JUNCTION BLOCK AND WIRE HARNESS CONNECTOR

Code	See Page	Junction Block and Wire Harness (Connector Location)
1A	27	Engine Wire and Engine Room J/B (Engine Compartment Left)
1B	27	Engine Room Main Wire and Engine Room J/B (Engine Compartment Left)
1F		
1J		
1K		
2A	30	Instrument Panel Wire and Instrument Panel J/B (Cowl Side Panel LH)
2B		
2C		
2D		
2G	31	Engine Room Main Wire and Instrument Panel J/B (Cowl Side Panel LH)
2K	31	Cowl Wire and Instrument Panel J/B (Cowl Side Panel LH)

: CONNECTOR JOINING WIRE HARNESS AND WIRE HARNESS

Code	See Page	Joining Wire Harness and Wire Harness (Connector Location)
IA1	42	Engine Room Main Wire and Cowl Wire (Cowl Side Panel LH)
IA2		
IB1	42	Floor Wire and Cowl Wire (Cowl Side Panel LH)
ID1	42	Instrument Panel Wire and Cowl Wire (Left Kick Panel)
IE1	42	Instrument Panel Wire and Engine Room Main Wire (Left Kick Panel)
IF1	42	Instrument Panel Wire and Floor Wire (Left Kick Panel)
IF2		
IH1	42	Floor Wire and Engine Room Main Wire (Left Kick Panel)
IK1	44	Engine Wire and Engine Room Main Wire (Right Kick Panel)

: GROUND POINTS

Code	See Page	Ground Points Location
EC	40	Engine Compartment Left
ID	42	Cowl Side Panel LH
IE		
IG	42	Cowl Side Panel RH
IH	42	Right Kick Panel
BI	46	Left Side of Rear Pillar
BJ	46	Right Side of Rear Pillar

: SPLICE POINTS

Code	See Page	Wire Harness with Splice Points	Code	See Page	Wire Harness with Splice Points
E5	40	Engine Room Main Wire	I8	44	Engine Wire
I2	44	Instrument Panel Wire	I9	44	Engine Room Main Wire
I4	44	Cowl Wire	B2	46	Floor Wire

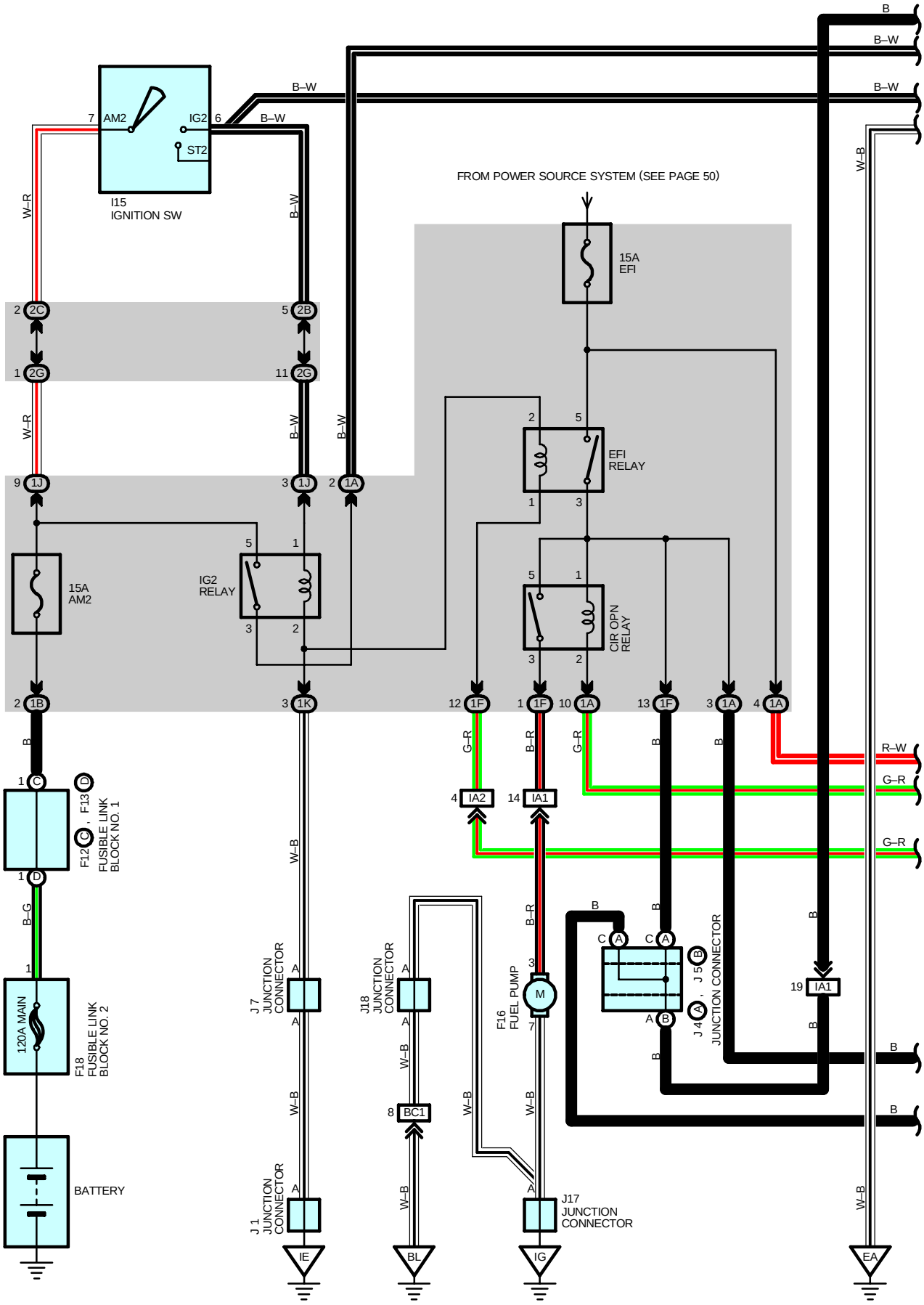

I15
IGNITION SW
AM2
IG2
ST2
FROM POWER SOURCE SYSTEM (SEE PAGE 50)
15A
EFI
EFI
RELAY
CIR OPN
RELAY
IG2
RELAY
15A
AM2
F12 C , F13 D
FUSIBLE LINK
BLOCK NO. 1
120A MAIN
F18
FUSIBLE LINK
BLOCK NO. 2
BATTERY
J 7
JUNCTION
CONNECTOR
J 1
JUNCTION
CONNECTOR
J18
JUNCTION
CONNECTOR
F16
FUEL PUMP
J 4 A , J 5 B
JUNCTION CONNECTOR
J17
JUNCTION
CONNECTOR
IA2
IA1
BC1
IE
BL
IG
EA

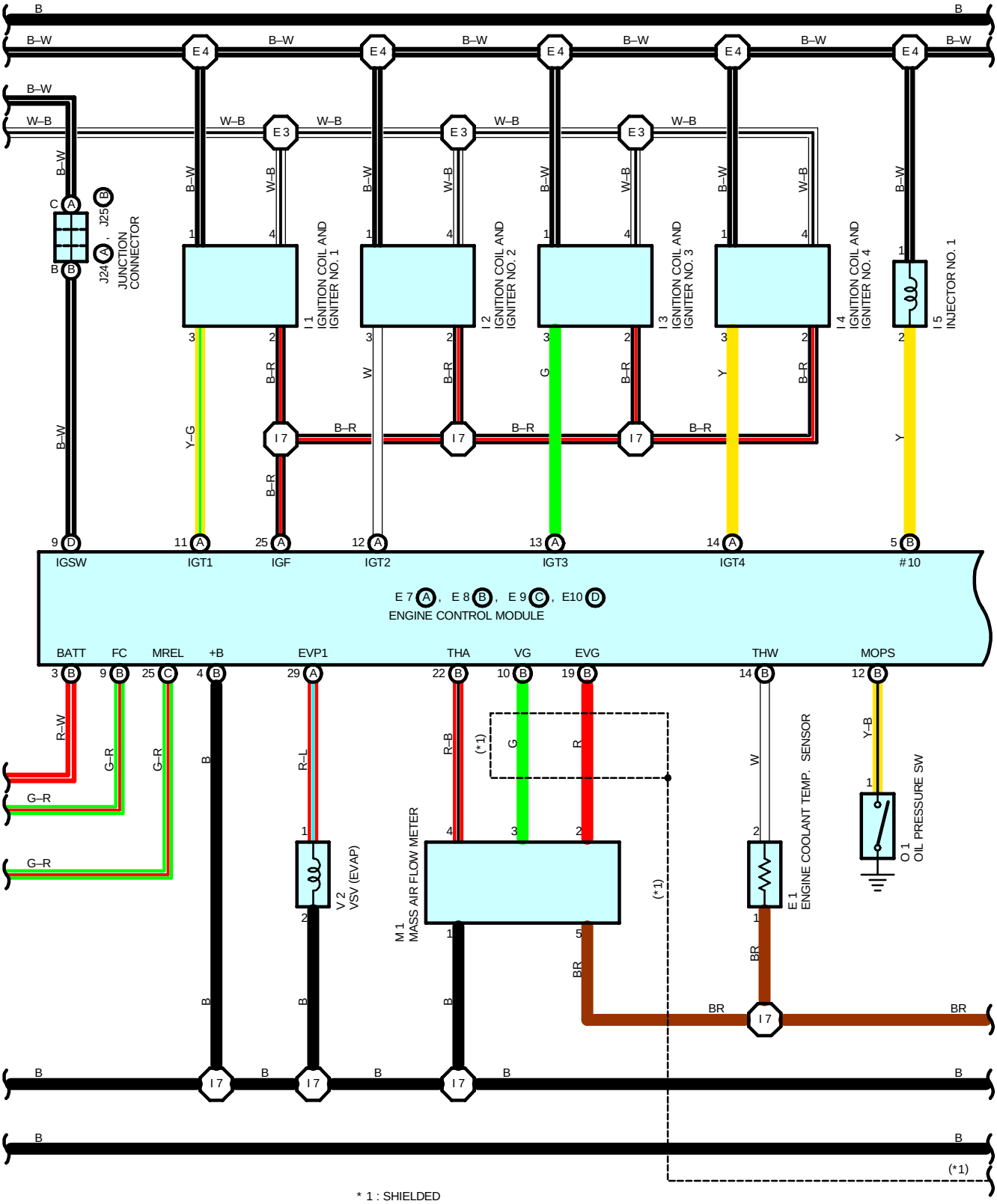
B
B–W
W–B
E 4
E 3
J24 , J25
JUNCTION CONNECTOR
I 1 IGNITION COIL AND IGNITER NO. 1
I 2 IGNITION COIL AND IGNITER NO. 2
I 3 IGNITION COIL AND IGNITER NO. 3
I 4 IGNITION COIL AND IGNITER NO. 4
I 5 INJECTOR NO. 1
I 7
Y–G
B–R
W
G
Y
IGSW
IGT1
IGF
IGT2
IGT3
IGT4
#10
E 7 , E 8 , E 9 , E10
ENGINE CONTROL MODULE
BATT
FC
MREL
+B
EVP1
THA
VG
EVG
THW
MOPS
R–W
G–R
R–L
R–B
(*1)
V 2 VSV (EVAP)
M 1 MASS AIR FLOW METER
E 1 ENGINE COOLANT TEMP. SENSOR
Y–B
O 1 OIL PRESSURE SW
BR
* 1 : SHIELDED

ENGINE CONTROL

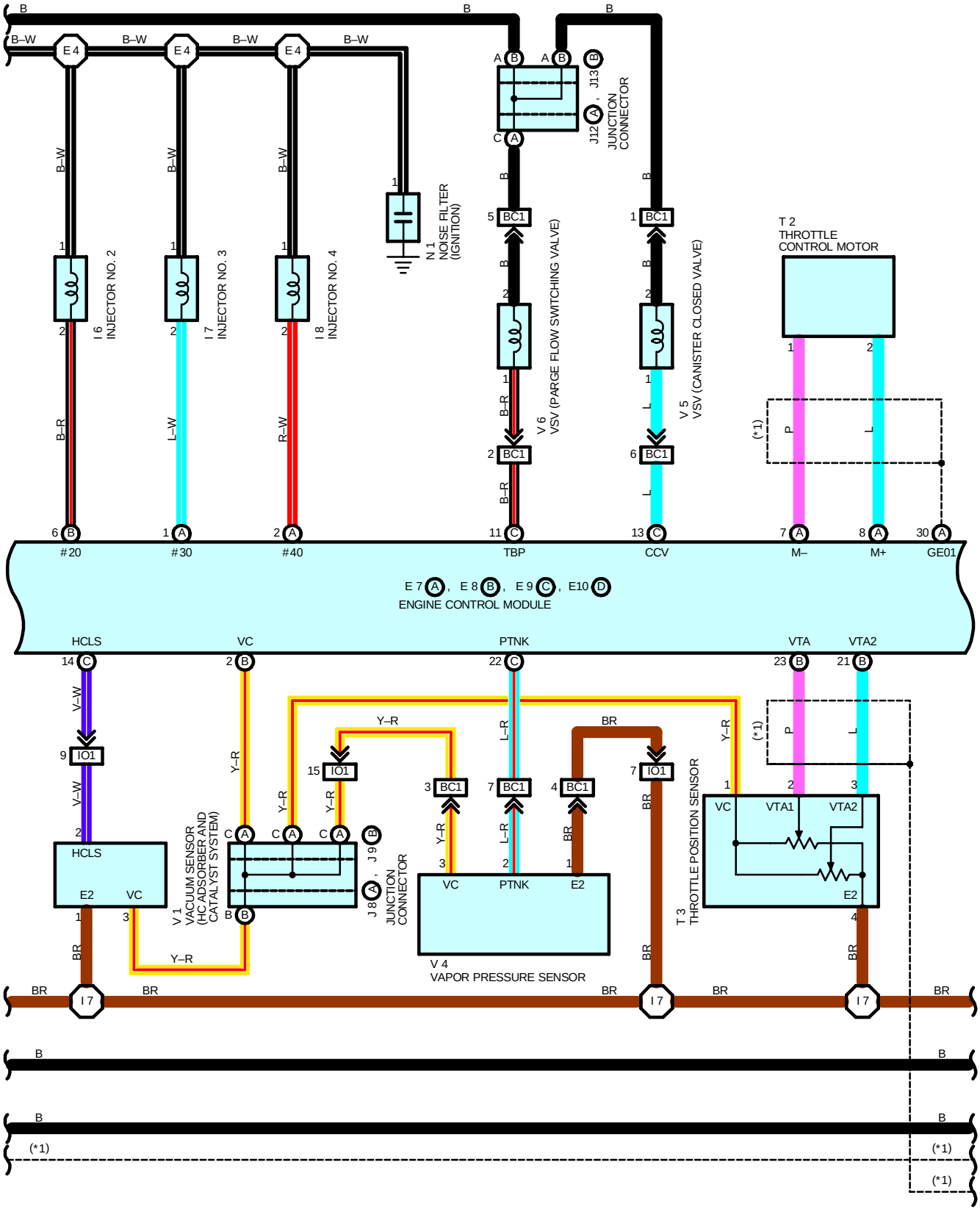

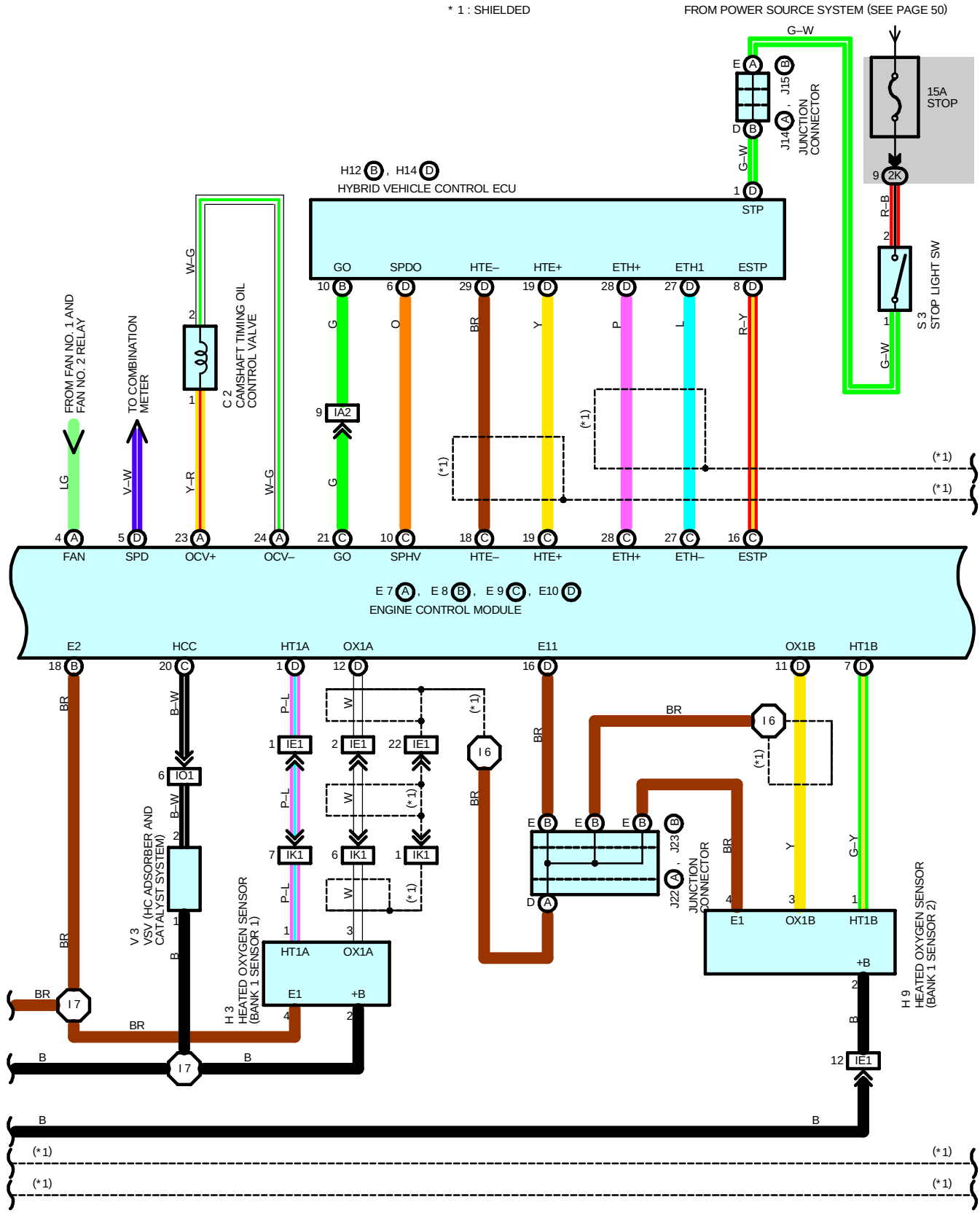

* 1 : SHIELDED
FROM POWER SOURCE SYSTEM (SEE PAGE 50)
G–W
15A STOP
2K
R–B
S 3 STOP LIGHT SW
J14 A , J15 B
JUNCTION CONNECTOR
H12 B , H14 D
HYBRID VEHICLE CONTROL ECU
STP
GO
SPDO
HTE–
HTE+
ETH+
ETH1
ESTP
IA2
FROM FAN NO. 1 AND FAN NO. 2 RELAY
TO COMBINATION METER
C 2 CAMSHAFT TIMING OIL CONTROL VALVE
W–G
Y–R
V–W
LG
FAN
SPD
OCV+
OCV–
SPHV
ETH–
E 7 A , E 8 B , E 9 C , E10 D
ENGINE CONTROL MODULE
E2
HCC
HT1A
OX1A
E11
OX1B
HT1B
IO1
IE1
IK1
I 6
I 7
V 3 VSV (HC ADSORBER AND CATALYST SYSTEM)
H 3 HEATED OXYGEN SENSOR (BANK 1 SENSOR 1)
E1
+B
J22 A , J23 B
JUNCTION CONNECTOR
H 9 HEATED OXYGEN SENSOR (BANK 1 SENSOR 2)
(*1)

ENGINE CONTROL

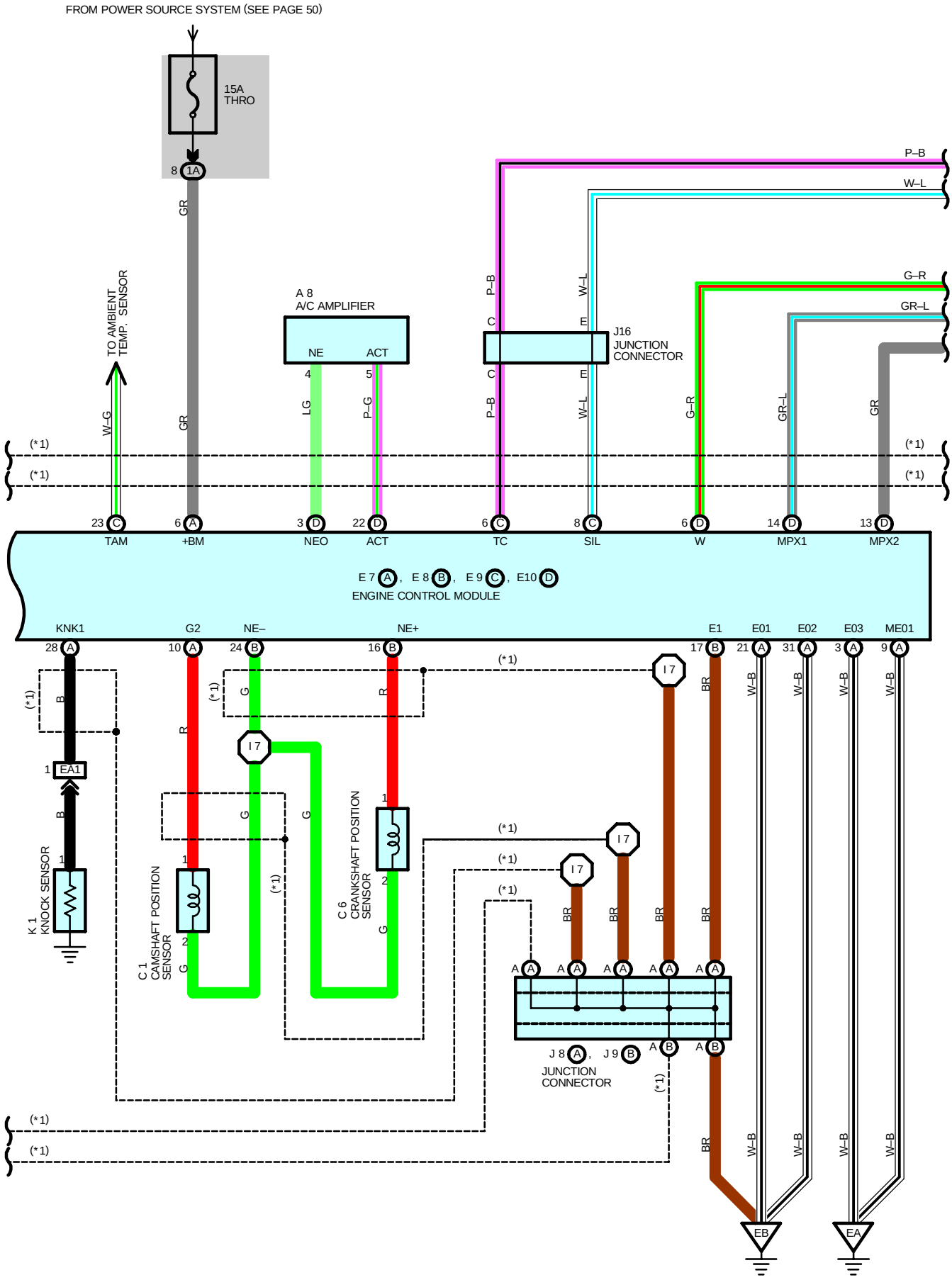

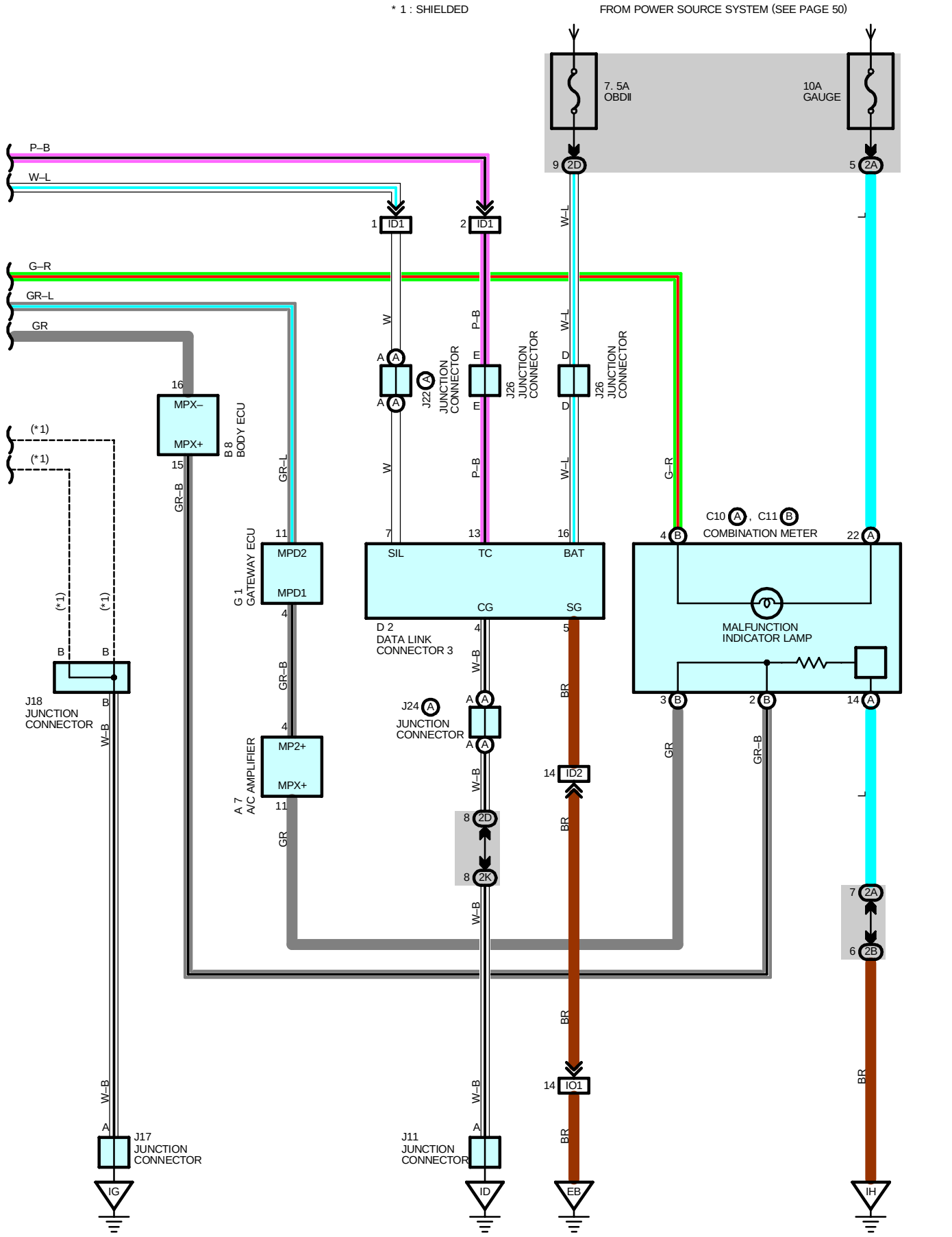
* 1 : SHIELDED
FROM POWER SOURCE SYSTEM (SEE PAGE 50)
7. 5A
OBDII
10A
GAUGE
9 2D
5 2A
P–B
W–L
1 ID1
2 ID1
G–R
GR–L
GR
W
P–B
W–L
L
A A J22 JUNCTION CONNECTOR
E E J26 JUNCTION CONNECTOR
D D J26 JUNCTION CONNECTOR
16
MPX–
MPX+
15
B 8 BODY ECU
(*1)
(*1)
GR–B
GR–L
G–R
11
MPD2
MPD1
4
G 1 GATEWAY ECU
7 SIL
13 TC
16 BAT
CG
SG
D 2 DATA LINK CONNECTOR 3
C10 A , C11 B
COMBINATION METER
4 B
22 A
MALFUNCTION INDICATOR LAMP
3 B
2 B
14 A
(*1)
(*1)
B B
J18 JUNCTION CONNECTOR
B
W–B
J24 A JUNCTION CONNECTOR
A A
BR
GR
GR–B
4
MP2+
MPX+
11
A 7 A/C AMPLIFIER
14 ID2
8 2D
8 2K
7 2A
6 2B
W–B
BR
14 IO1
A J17 JUNCTION CONNECTOR
A J11 JUNCTION CONNECTOR
IG
ID
EB
IH

ENGINE CONTROL

SYSTEM OUTLINE

This system utilizes an engine control module and maintains overall control of the engine, transmission and so on. An outline of the engine control is explained here.

1. INPUT SIGNALS

(1) Engine coolant temp. signal circuit

The engine coolant temp. sensor detects the engine coolant temp. and has a built–in thermistor with a resistance which varies according to the engine coolant temp. thus the engine coolant temp. is input in the form of a control signal into TERMINAL THW of the engine control module.

(2) Intake air temp. signal circuit

The intake air temp. sensor is installed in the mass air flow meter and detects the intake air temp., which is input as a control signal into TERMINAL THA of the engine control module.

(3) Oxygen sensor signal circuit

The oxygen density in the exhaust gases is detected and input as a control signal into TERMINALS OX1A and OX1B of the engine control module.

(4) RPM signal circuit

Camshaft position and crankshaft position are detected by the camshaft position sensor and crankshaft position sensor. Camshaft position is input as a control signal to TERMINAL G2 of the engine control module, and engine RPM is input into TERMINAL NE+.

(5) Throttle signal circuit

The throttle position sensor detects the throttle valve opening angle, which is input as a control signal into TERMINALS VTA and VTA2 of the engine control module.

(6) Vehicle speed signal circuit

The vehicle speed signal from combination meter, detects the vehicle speed and inputs a control signal into TERMINAL SPD of the engine control module via the combination meter.

(7) Battery signal circuit

Voltage is constantly applied to TERMINAL BATT of the engine control module. When the ignition SW is turned on, the voltage for engine control module start–up power supply is applied to TERMINAL +B of the engine control module via EFI relay.

(8) Engine knock signal circuit

Engine knocking is detected by knock sensor and the signal is input into TERMINAL KNK1 of the engine control module as a control signal.

2. CONTROL SYSTEM

* SFI system

  The SFI system monitors the engine condition through the signals, which are input from each sensor to the engine control module. The best fuel injection volume is decided based on this data and the program memorized by the engine control module, and the control signal is output to TERMINALS #10, #20, #30 and #40 of the engine control module to operate the injector. (Inject the fuel). The SFI system produces control of fuel injection operation by the engine control module in response to the driving conditions.

* ESA system

  The ESA system monitors the engine condition through the signals, which are input to the engine control module from each sensor. The best ignition timing is detected according to this data and the memorized data in the engine control module, and the control signal is output to TERMINALS IGT1, IGT2, IGT3 and IGT4. This signal controls the ignition coil and igniter to provide the best ignition timing for the driving conditions.

* Fuel pump control system

  The engine control module operation outputs to TERMINAL FC and controls the CIR OPN relay. Thus controls the fuel pump drive speed in response to conditions.

3. DIAGNOSIS SYSTEM

With the diagnosis system, when there is a malfunctioning in the engine control module signal system, the malfunction system is recorded in the memory. The malfunctioning system can then be found by reading the display (Code) of the malfunction indicator lamp.

4. FAIL–SAFE SYSTEM

When a malfunction occurs in any system, if there is a possibility of engine trouble being caused by continued control based on the signals from that system, the fail–safe system either controls the system by using data (Standard values) recorded in the engine control module memory or else stops the engine.

SERVICE HINTS

E7 (A), E8 (B), E9 (C), E10 (D) ENGINE CONTROL MODULE

BATT–E1 : Always approx. **9**–**14** volts
+B–E1 : **9**–**14** volts with the ignition SW on and the engine stopping
VC–E2 : **4.5**–**5.5** volts with the ignition SW on and the engine stopping
IGF–E1 : Pulse generation with the engine idling
THA–E2 : **0.5**–**3.4** volts with the engine idling and the intake air temp. **20**˚C (**68**˚F)
THW–E2 : **0.2**–**1.0** volts with the engine idling and the engine coolant temp. **80**˚C (**176**˚F)
W–E1 : **9**–**14** volts with the engine idling
: **0**–**3** volts with the ignition SW on and the engine coolant temp. sensor connector disconnects
ESTP–E1 : **9**–**14** volts with the brake pedal depressed
FC–E01 : **9**–**14** volts with the ignition SW on and the engine stopping
: **0**–**3** volts with the engine idling
+BM–E1 : Always approx. **9**–**14** volts
MREL–E1 : **9**–**14** volts with the ignition SW on and the engine stopping
EVP1–E1 : **9**–**14** volts with the ignition SW on and the engine stopping
HT1A, HT1B : **9**–**14** volts with the ignition SW on and the engine stopping
TC–E1 : **9**–**14** volts with the ignition SW on and the engine stopping
KNK1–E2 : Pulse generation with the engine idling
NE+, G2–NE–: Pulse generation with the engine idling
OCV+ –OCV– : Pulse generation with the ignition SW on and the engine stopping
IGT1, IGT2, IGT3, IGT4–E1 : Pulse generation with the engine idling
#10, #20, #30, #40–E01 : Pulse generation with the engine idling
E01, E02, E03, E1, E2, ME01–GROUND : Always continuity

E1 ENGINE COOLANT TEMP. SENSOR

2–1 : Approx. **14.96** kΩ (**–20** ˚C, **–4** ˚F)
Approx. **2.44** kΩ (**20** ˚C, **68** ˚F)
Approx. **0.31** kΩ (**80** ˚C, **176** ˚F)
Approx. **0.14** kΩ (**110** ˚C, **230** ˚F)

○ : PARTS LOCATION

Code	See Page	Code	See Page	Code	See Page
A7	36	H14 D	37	J17	37
A8	36	I1	35	J18	37
B8	36	I2	35	J22 A	37
C1	34	I3	35	J23 B	37
C2	34	I4	35	J24 A	37
C6	34	I5	35	J25 B	37
C10 A	36	I6	35	J26	37
C11 B	36	I7	35	K1	35
D2	36	I8	35	M1	35
E1	34	I15	37	N1	35
E7 A	36	J1	37	O1	35
E8 B	36	J4 A	37	S3	37
E9 C	36	J5 B	37	T2	35
E10 D	36	J7	37	T3	35
F12 C	34	J8 A	37	V1	35
F13 D	34	J9 B	37	V2	35
F16	38	J11	37	V3	35
F18	38	J12 A	37	V4	39
G1	37	J13 B	37	V5	39
H3	34	J14 A	37	V6	39
H9	37	J15 B	37		
H12 B	37	J16	37		

ENGINE CONTROL



: JUNCTION BLOCK AND WIRE HARNESS CONNECTOR

Code	See Page	Junction Block and Wire Harness (Connector Location)
1A	27	Engine Wire and Engine Room J/B (Engine Compartment Left)
1B	27	Engine Room Main Wire and Engine Room J/B (Engine Compartment Left)
1F		
1J		
1K		
2A	30	Instrument Panel Wire and Instrument Panel J/B (Cowl Side Panel LH)
2B		
2C		
2D		
2G	31	Engine Room Main Wire and Instrument Panel J/B (Cowl Side Panel LH)
2K	31	Cowl Wire and Instrument Panel J/B (Cowl Side Panel LH)



: CONNECTOR JOINING WIRE HARNESS AND WIRE HARNESS

Code	See Page	Joining Wire Harness and Wire Harness (Connector Location)
EA1	40	Engine Wire and Engine No.4 Wire (Near the Radiator Fan)
IA1	42	Engine Room Main Wire and Cowl Wire (Cowl Side Panel LH)
IA2		
ID1	42	Instrument Panel Wire and Cowl Wire (Left Kick Panel)
ID2		
IE1	42	Instrument Panel Wire and Engine Room Main Wire (Left Kick Panel)
IK1	44	Engine Wire and Engine Room Main Wire (Right Kick Panel)
IO1	44	Engine Wire and Cowl Wire (Right Kick Panel)
BC1	46	Cowl Wire and Fuel Tank Wire (Near the Fuel Tank)



: GROUND POINTS

Code	See Page	Ground Points Location
EA	40	Engine Block
EB		
ID	42	Cowl Side Panel LH
IE		
IG	42	Cowl Side Panel RH
IH	42	Right Kick Panel
BL	46	Near the Fuel Tank



: SPLICE POINTS

Code	See Page	Wire Harness with Splice Points	Code	See Page	Wire Harness with Splice Points
E3	40	Engine Wire	I6	44	Instrument Panel Wire
E4			I7	44	Engine Wire

HYBRID VEHICLE IMMOBILISER SYSTEM

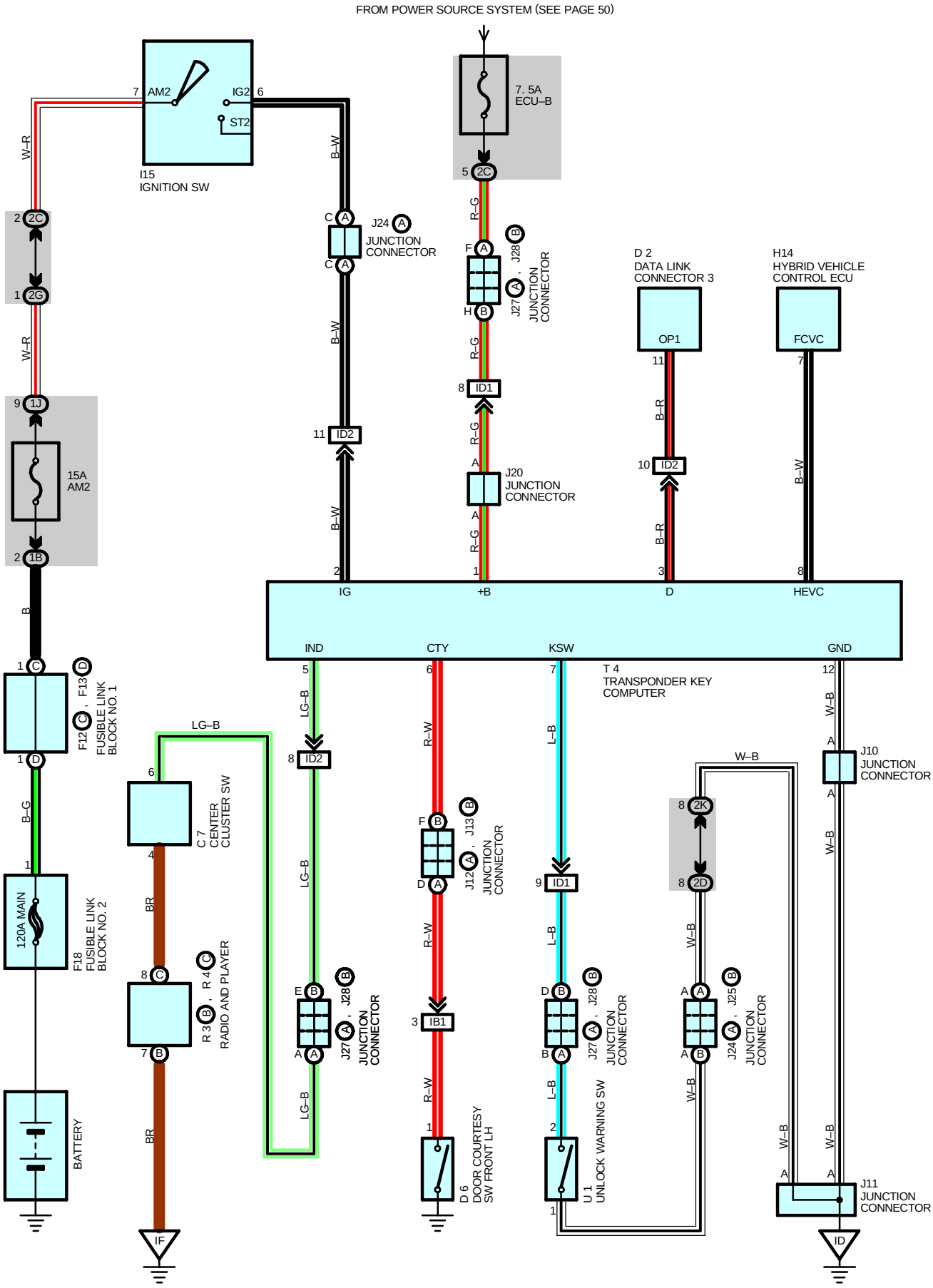

SERVICE HINTS

T4 TRANSPONDER KEY COMPUTER

1–GROUND : Always approx. **12** volts

12–GROUND : Always continuity

U1 UNLOCK WARNING SW

1–2 : Closed with the ignition key in cylinder

: PARTS LOCATION

Code	See Page	Code	See Page	Code	See Page
C7	36	I15	37	J25 B	37
D2	36	J10	37	J27 A	37
D6	38	J11	37	J28 B	37
F12 C	34	J12 A	37	R3 B	37
F13 D	34	J13 B	37	R4 C	37
F18	38	J20	37	T4	37
H14	37	J24 A	37	U1	37

: JUNCTION BLOCK AND WIRE HARNESS CONNECTOR

Code	See Page	Junction Block and Wire Harness (Connector Location)
1B	27	Engine Room Main Wire and Engine Room J/B (Engine Compartment Left)
1J		
2C	30	Instrument Panel Wire and Instrument Panel J/B (Cowl Side Panel LH)
2D		
2G	31	Engine Room Main Wire and Instrument Panel J/B (Cowl Side Panel LH)
2K	31	Cowl Wire and Instrument Panel J/B (Cowl Side Panel LH)

: CONNECTOR JOINING WIRE HARNESS AND WIRE HARNESS

Code	See Page	Joining Wire Harness and Wire Harness (Connector Location)
IB1	42	Floor Wire and Cowl Wire (Cowl Side Panel LH)
ID1	42	Instrument Panel Wire and Cowl Wire (Left Kick Panel)
ID2		

: GROUND POINTS

Code	See Page	Ground Points Location
ID	42	Cowl Side Panel LH
IF	42	Left Kick Panel

HEADLIGHT (w/ DAYTIME RUNNING LIGHT)

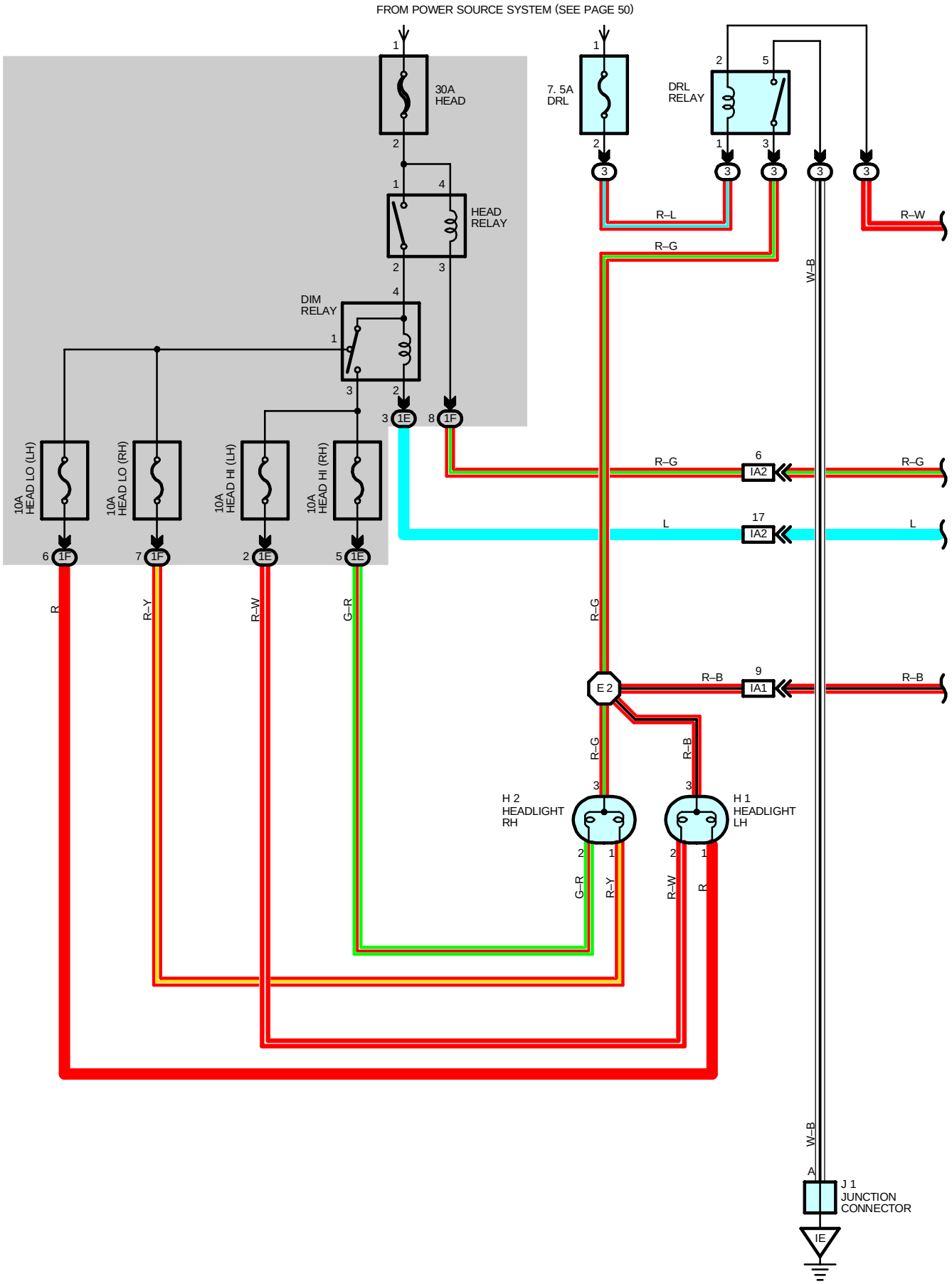

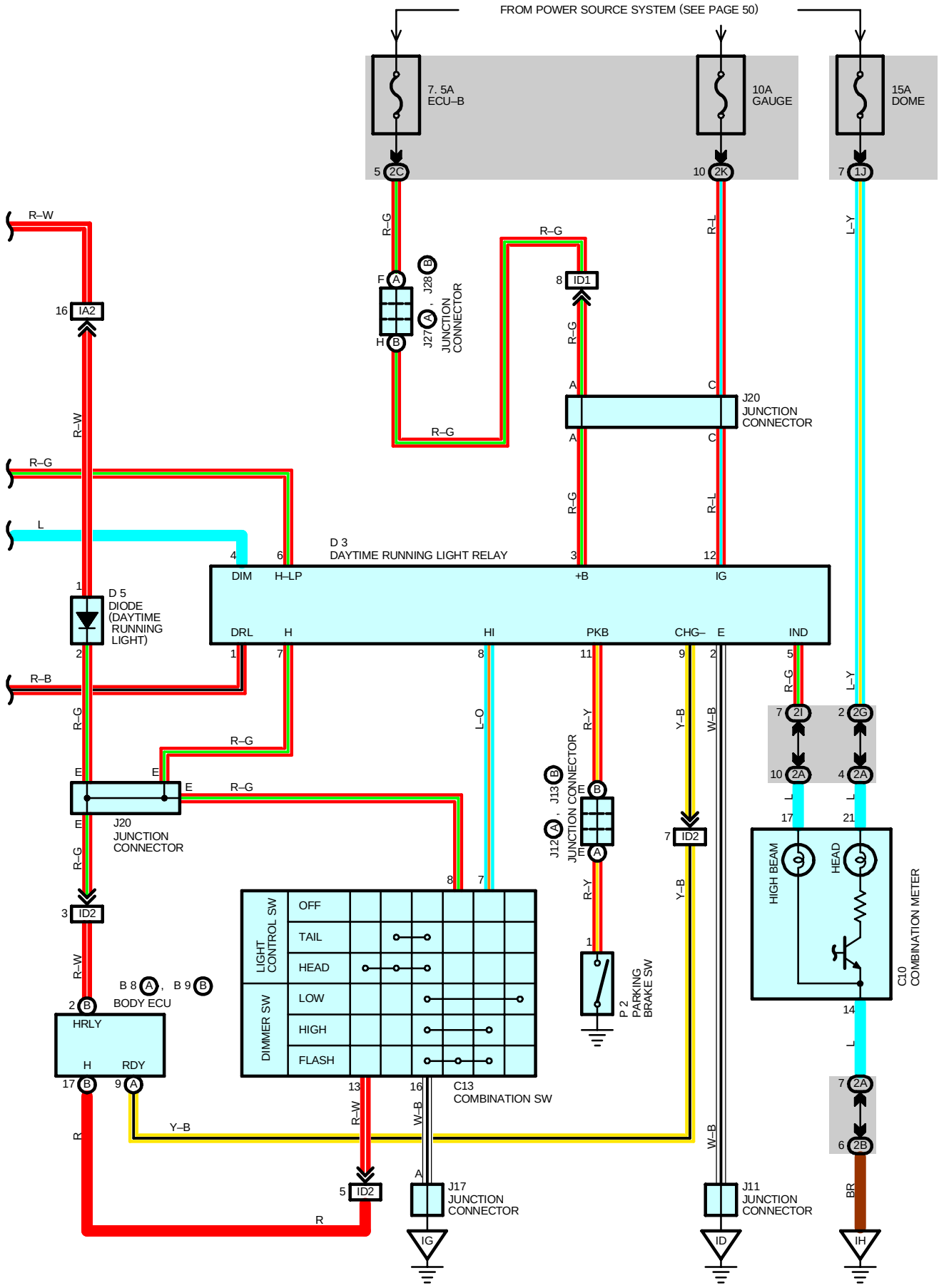
FROM POWER SOURCE SYSTEM (SEE PAGE 50)
7. 5A
ECU–B
10A
GAUGE
15A
DOME
5 2C
10 2K
7 1J
R–W
R–G
R–L
L–Y
16 IA2
F A
H B
J28 B
J27 A
JUNCTION CONNECTOR
8 ID1
A
C
J20
JUNCTION CONNECTOR
L
D 3
DAYTIME RUNNING LIGHT RELAY
DIM
H–LP
+B
IG
DRL
H
HI
PKB
CHG–
E
IND
D 5
DIODE
(DAYTIME RUNNING LIGHT)
R–B
L–O
R–Y
Y–B
W–B
7 2I
2 2G
10 2A
4 2A
J20
JUNCTION CONNECTOR
J13 B
J12 A
JUNCTION CONNECTOR
7 ID2
HIGH BEAM
HEAD
C10
COMBINATION METER
3 ID2
LIGHT CONTROL SW
OFF
TAIL
HEAD
DIMMER SW
LOW
HIGH
FLASH
P 2
PARKING BRAKE SW
B 8 A, B 9 B
BODY ECU
HRLY
H
RDY
C13
COMBINATION SW
5 ID2
J17
JUNCTION CONNECTOR
J11
JUNCTION CONNECTOR
IG
ID
IH
BR

HEADLIGHT (w/ DAYTIME RUNNING LIGHT)

SYSTEM OUTLINE

When the ignition SW is turned on ST position and "READY" signal from engine control module is sent to the daytime running light relay via body ECU. If the parking brake pedal is depressed (Parking brake SW is on) at that time, the daytime running light system does not operate. If the parking brake pedal is released (Parking brake SW is off), the daytime running light system operates and the low beam headlight comes on.

SERVICE HINTS

HEAD RELAY

1–2 : Closed with the light control SW at **HEAD** position or the dimmer SW at **FLASH** position
Closed with the engine running and the parking brake lever is released (Parking brake SW off)

D3 DAYTIME RUNNING LIGHT RELAY

12–GROUND : Approx. **12** volts with the ignition SW at **ON** position
3–GROUND : Always approx. **12** volts
11–GROUND : Continuity with the parking brake lever pulled up
2–GROUND : Always continuity
8–GROUND : Continuity with the dimmer SW at **HIGH** or **FLASH** position

: PARTS LOCATION

Code	See Page	Code	See Page	Code	See Page
B8 A	36	H1	34	J17	37
B9 B	36	H2	34	J20	37
C10	36	J1	37	J27 A	37
C13	36	J11	37	J28 B	37
D3	36	J12 A	37	P2	37
D5	36	J13 B	37		

: RELAY BLOCKS

Code	See Page	Relay Blocks (Relay Block Location)
3	24	Engine Room R/B No.3 (Engine Compartment Right)

: JUNCTION BLOCK AND WIRE HARNESS CONNECTOR

Code	See Page	Junction Block and Wire Harness (Connector Location)
1E	27	Engine Room Main Wire and Engine Room J/B (Engine Compartment Left)
1F		
1J		
2A	30	Instrument Panel Wire and Instrument Panel J/B (Cowl Side Panel LH)
2B		
2C		
2G	31	Engine Room Main Wire and Instrument Panel J/B (Cowl Side Panel LH)
2I	31	Cowl Wire and Instrument Panel J/B (Cowl Side Panel LH)
2K		

: CONNECTOR JOINING WIRE HARNESS AND WIRE HARNESS

Code	See Page	Joining Wire Harness and Wire Harness (Connector Location)
IA1	42	Engine Room Main Wire and Cowl Wire (Cowl Side Panel LH)
IA2		
ID1	42	Instrument Panel Wire and Cowl Wire (Left Kick Panel)
ID2		

: GROUND POINTS

Code	See Page	Ground Points Location
ID	42	Cowl Side Panel LH
IE		
IG	42	Cowl Side Panel RH
IH	42	Right Kick Panel

: SPLICE POINTS

Code	See Page	Wire Harness with Splice Points	Code	See Page	Wire Harness with Splice Points
E2	40	Engine Room Main Wire			

HEADLIGHT (w/o DAYTIME RUNNING LIGHT)

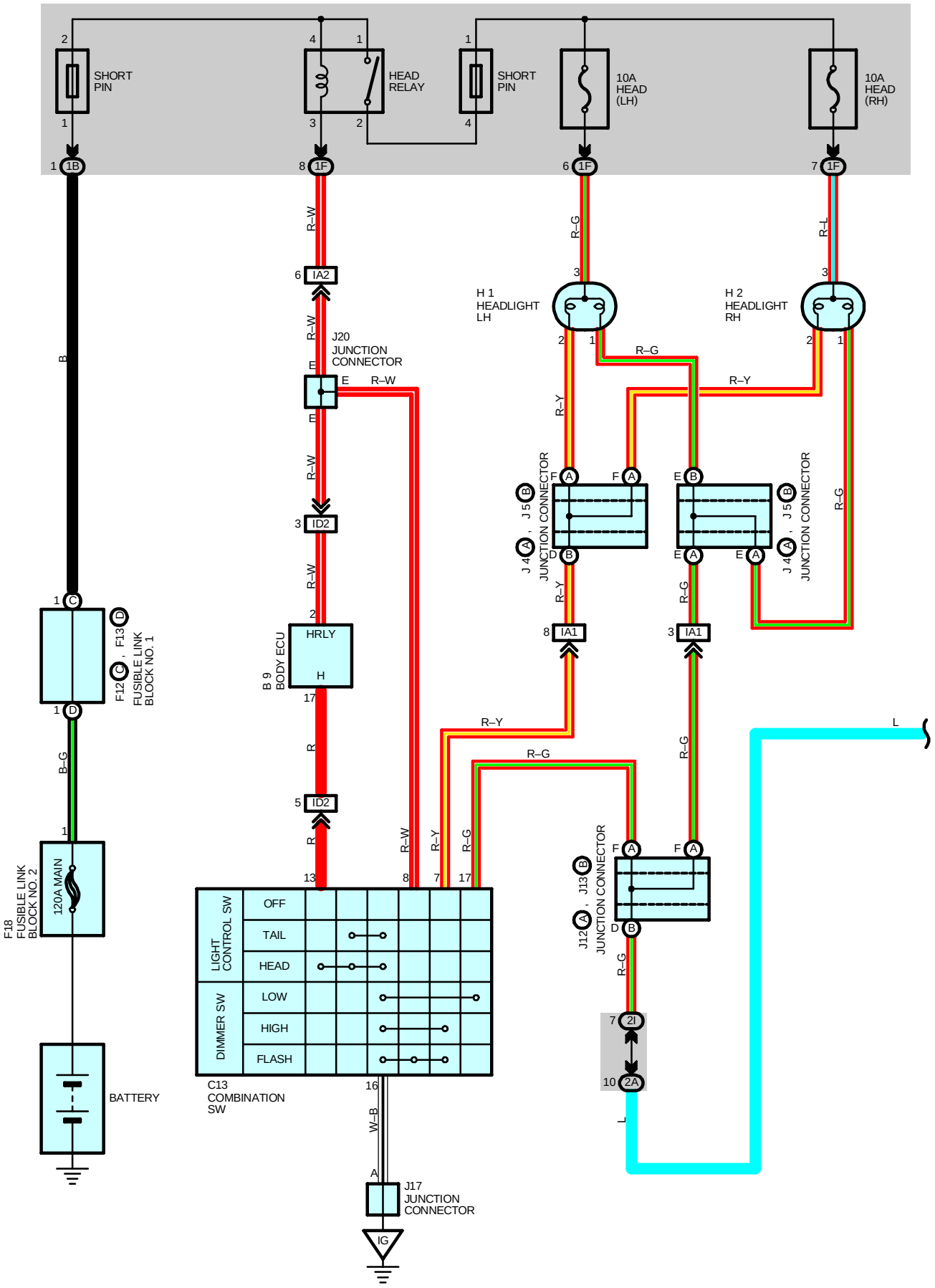

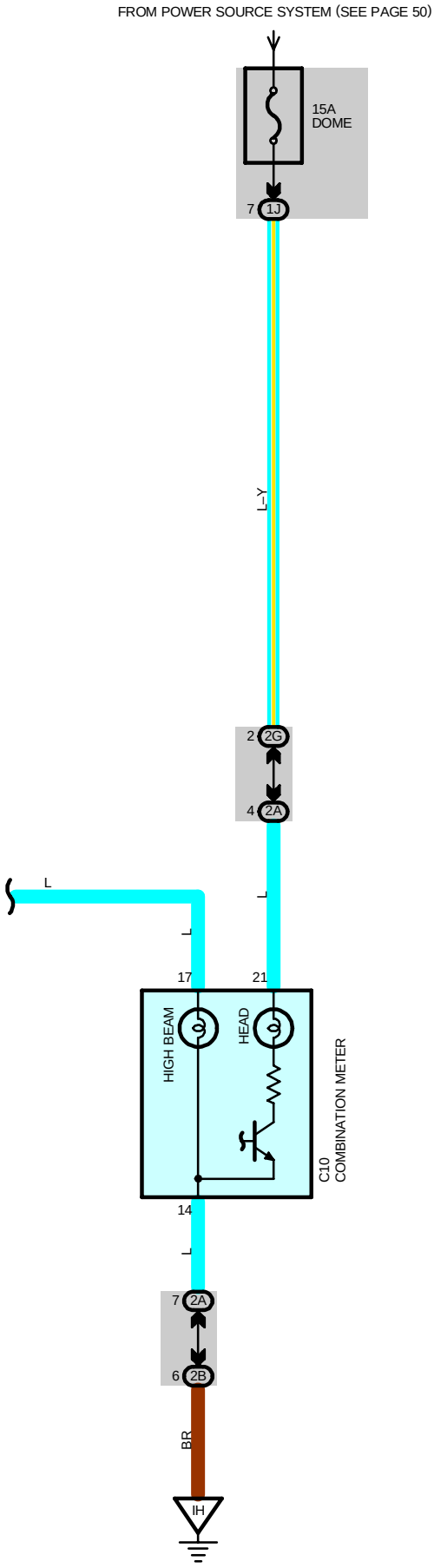
FROM POWER SOURCE SYSTEM (SEE PAGE 50)
15A
DOME
7
1J
L-Y
2
2G
4
2A
L
L
17
21
HIGH BEAM
HEAD
C10
COMBINATION METER
14
L
7
2A
6
2B
BR
IH

HEADLIGHT (w/o DAYTIME RUNNING LIGHT)

SERVICE HINTS

HEAD RELAY

1–2 : Closed with the light control SW at **HEAD** position or the dimmer SW at **FLASH** position

C13 COMBINATION SW

13–16 : Continuity with the light control SW at **HEAD** position
8–16 : Continuity with the dimmer SW at **FLASH** position
7–16 : Continuity with the dimmer SW at **HIGH** or **FLASH** position

: PARTS LOCATION

Code		See Page	Code		See Page	Code		See Page
B9		36	F18		38	J12	A	37
C10		36	H1		34	J13	B	37
C13		36	H2		34	J17		37
F12	C	34	J4	A	37	J20		37
F13	D	34	J5	B	37			

: JUNCTION BLOCK AND WIRE HARNESS CONNECTOR

Code	See Page	Junction Block and Wire Harness (Connector Location)
1B	27	Engine Room Main Wire and Engine Room J/B (Engine Compartment Left)
1F		
1J		
2A	30	Instrument Panel Wire and Instrument Panel J/B (Cowl Side Panel LH)
2B		
2G	31	Engine Room Main Wire and Instrument Panel J/B (Cowl Side Panel LH)
2I	31	Cowl Wire and Instrument Panel J/B (Cowl Side Panel LH)

: CONNECTOR JOINING WIRE HARNESS AND WIRE HARNESS

Code	See Page	Joining Wire Harness and Wire Harness (Connector Location)
IA1	42	Engine Room Main Wire and Cowl Wire (Cowl Side Panel LH)
IA2		
ID2	42	Instrument Panel Wire and Cowl Wire (Left Kick Panel)

: GROUND POINTS

Code	See Page	Ground Points Location
IG	42	Cowl Side Panel RH
IH	42	Right Kick Panel

TAILLIGHT

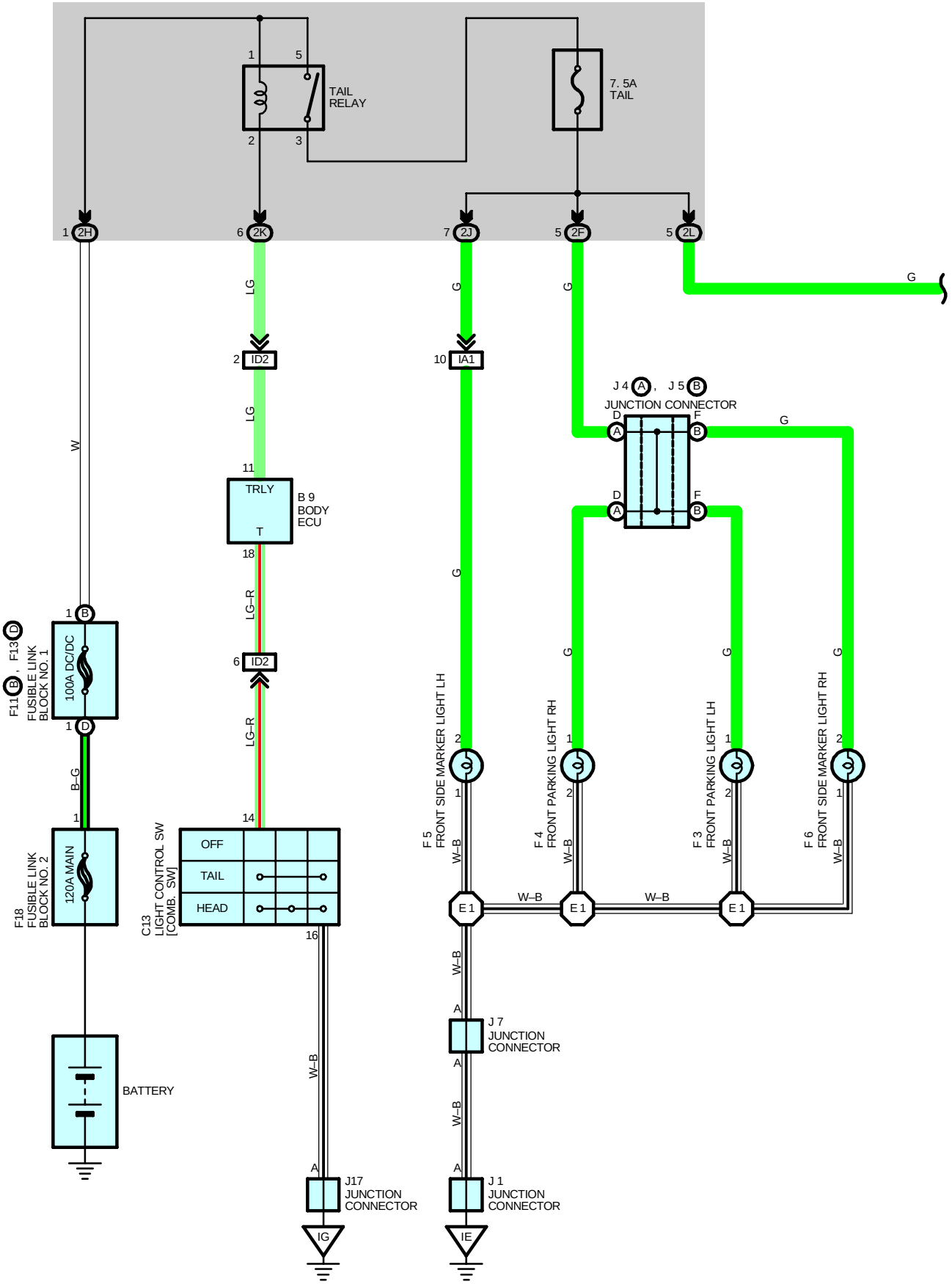
TAIL RELAY
7. 5A TAIL
2H
2K
2J
2F
2L
LG
G
W
ID2
IA1
TRLY
T
B 9 BODY ECU
LG–R
J 4 , J 5
JUNCTION CONNECTOR
100A DC/DC
FUSIBLE LINK BLOCK NO. 1
F11 , F13
B–G
120A MAIN
FUSIBLE LINK BLOCK NO. 2
F18
C13 LIGHT CONTROL SW [COMB. SW]
OFF
TAIL
HEAD
F 5 FRONT SIDE MARKER LIGHT LH
F 4 FRONT PARKING LIGHT RH
F 3 FRONT PARKING LIGHT LH
F 6 FRONT SIDE MARKER LIGHT RH
W–B
E 1
J 7 JUNCTION CONNECTOR
J 1 JUNCTION CONNECTOR
J17 JUNCTION CONNECTOR
BATTERY
IG
IE

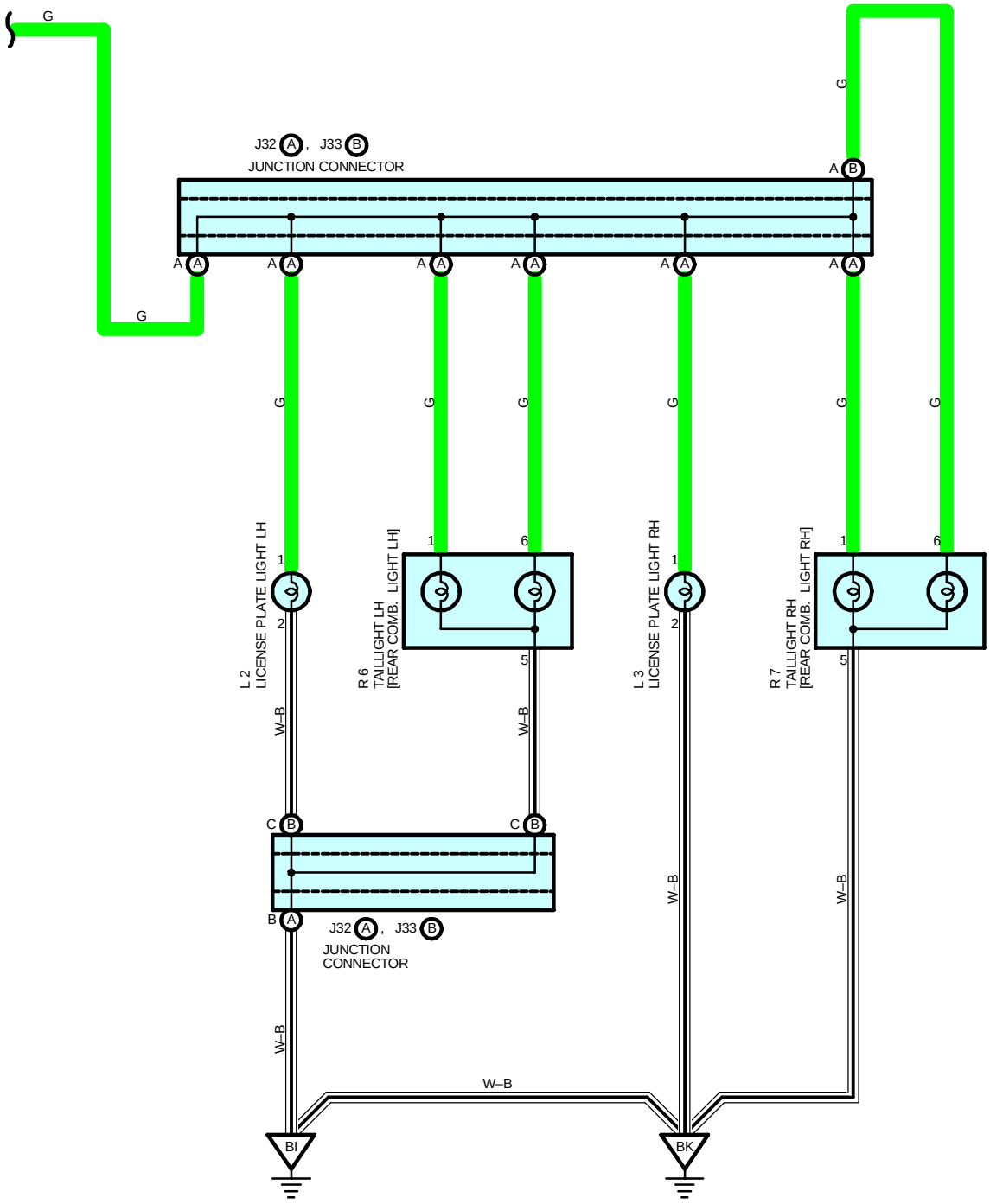
G
J32 A , J33 B
JUNCTION CONNECTOR
A B
A A A A A A A A A A A A
G
G
G
G
G
G
G
G
L 2
LICENSE PLATE LIGHT LH
1
2
W–B
R 6
TAILLIGHT LH
[REAR COMB. LIGHT LH]
1
6
5
W–B
L 3
LICENSE PLATE LIGHT RH
1
2
W–B
R 7
TAILLIGHT RH
[REAR COMB. LIGHT RH]
1
6
5
W–B
C B
C B
B A
J32 A , J33 B
JUNCTION
CONNECTOR
W–B
W–B
BI
BK

TAILLIGHT

SERVICE HINTS

TAIL RELAY

5–3 : Closed with the light control SW at **TAIL** or **HEAD** position

: PARTS LOCATION

Code	See Page	Code	See Page	Code	See Page
B9	36	F13 D	34	J32 A	38
C13	36	F18	38	J33 B	38
F3	34	J1	37	L2	38
F4	34	J4 A	37	L3	38
F5	34	J5 B	37	R6	39
F6	34	J7	37	R7	39
F11 B	34	J17	37		

: JUNCTION BLOCK AND WIRE HARNESS CONNECTOR

Code	See Page	Junction Block and Wire Harness (Connector Location)
2F	31	Engine Room Main Wire and Instrument Panel J/B (Cowl Side Panel LH)
2H		
2J	31	Cowl Wire and Instrument Panel J/B (Cowl Side Panel LH)
2K		
2L	31	Floor Wire and Instrument Panel J/B (Cowl Side Panel LH)

: CONNECTOR JOINING WIRE HARNESS AND WIRE HARNESS

Code	See Page	Joining Wire Harness and Wire Harness (Connector Location)
IA1	42	Engine Room Main Wire and Cowl Wire (Cowl Side Panel LH)
ID2	42	Instrument Panel Wire and Cowl Wire (Left Kick Panel)

: GROUND POINTS

Code	See Page	Ground Points Location
IE	42	Cowl Side Panel LH
IG	42	Cowl Side Panel RH
BI	46	Left Side of Rear Pillar
BK	46	Back Panel Center

: SPLICE POINTS

Code	See Page	Wire Harness with Splice Points	Code	See Page	Wire Harness with Splice Points
E1	40	Engine Room Main Wire			

ILLUMINATION

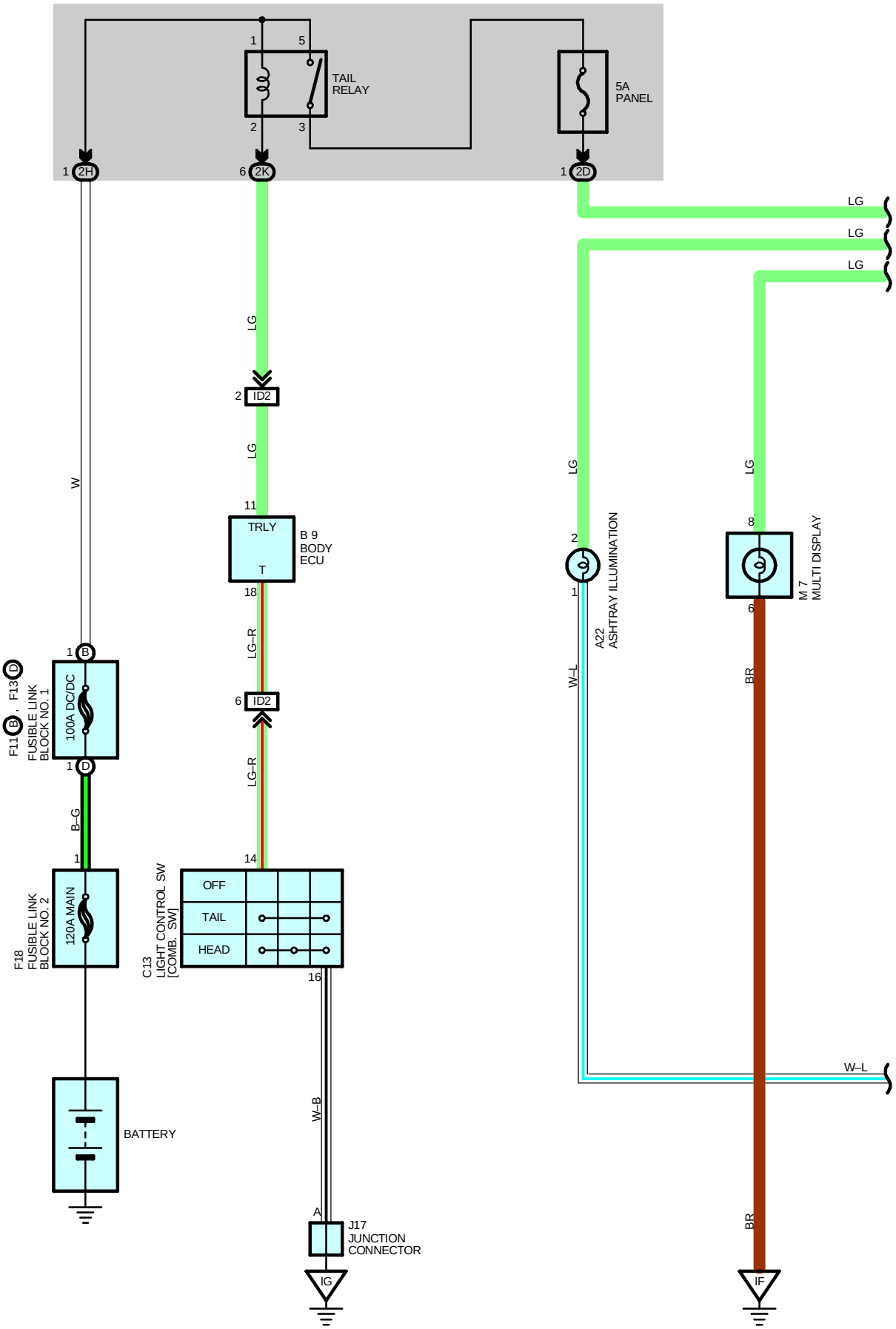

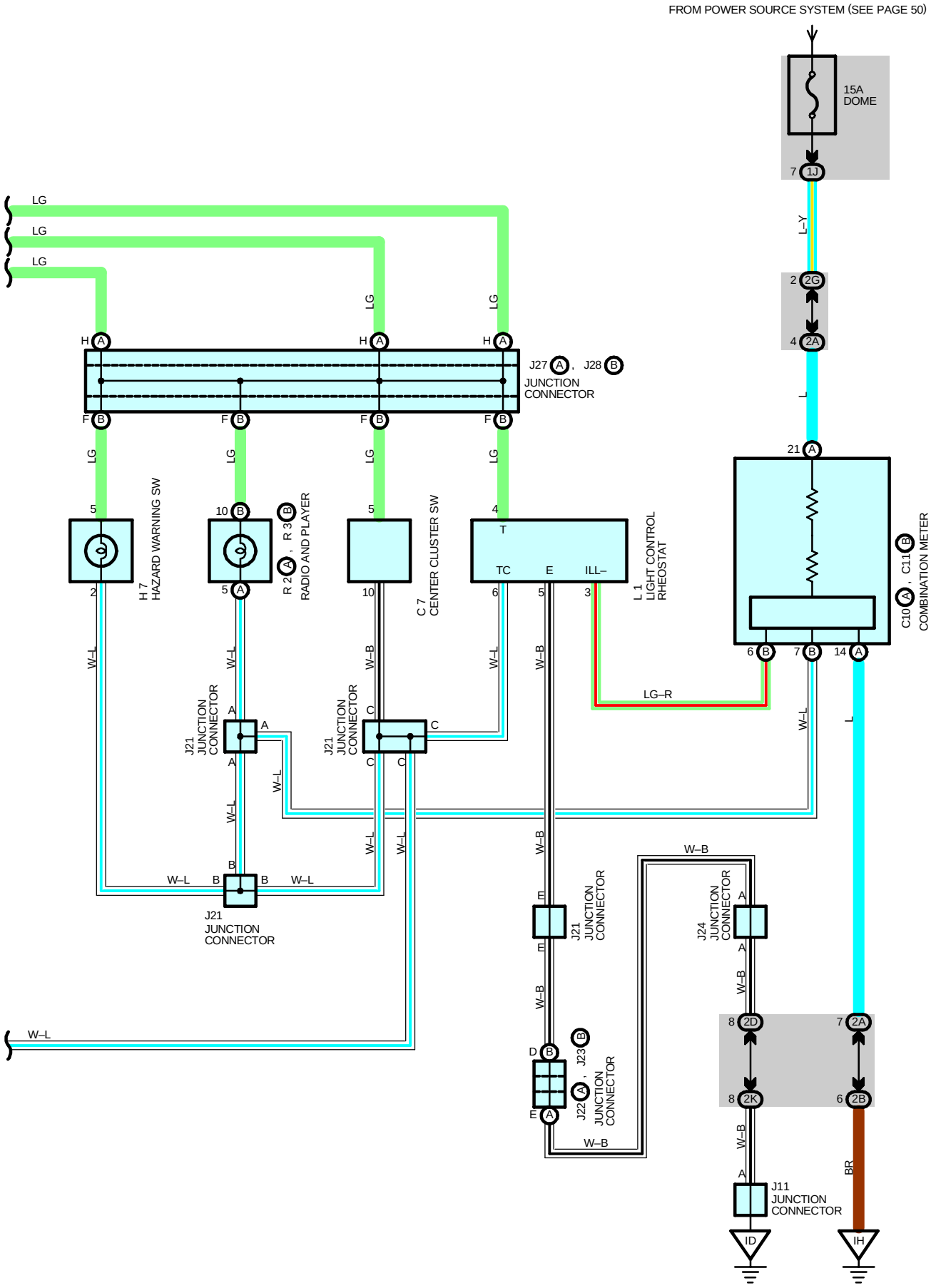
FROM POWER SOURCE SYSTEM (SEE PAGE 50)
15A
DOME
7 1J
L–Y
2 2G
4 2A
L
21 A
C10 A , C11 B
COMBINATION METER
6 B
7 B
14 A
LG–R
LG
LG
LG
H A
F B
J27 A , J28 B
JUNCTION
CONNECTOR
5
2
H 7
HAZARD WARNING SW
10 B
5 A
R 2 A , R 3 B
RADIO AND PLAYER
5
10
C 7
CENTER CLUSTER SW
4
T
TC
E
ILL–
6
5
3
L 1
LIGHT CONTROL
RHEOSTAT
W–L
W–B
J21
JUNCTION
CONNECTOR
A
C
B
J24
JUNCTION
CONNECTOR
D B
E A
J22 A , J23 B
JUNCTION
CONNECTOR
8 2D
7 2A
8 2K
6 2B
BR
J11
JUNCTION
CONNECTOR
ID
IH

ILLUMINATION

SERVICE HINTS

TAIL RELAY

5–3 : Closed with the light control SW at **TAIL** or **HEAD** position

C13 COMBINATION SW

14–16 : Closed with the light control SW at **TAIL** or **HEAD** position

○ : PARTS LOCATION

Code	See Page	Code	See Page	Code	See Page
A22	36	F18	38	J27 A	37
B9	36	H7	37	J28 B	37
C7	36	J11	37	L1	37
C10 A	36	J17	37	M7	37
C11 B	36	J21	37	R2 A	37
C13	36	J22 A	37	R3 B	37
F11 B	34	J23 B	37		
F13 D	34	J24	37		

: JUNCTION BLOCK AND WIRE HARNESS CONNECTOR

Code	See Page	Junction Block and Wire Harness (Connector Location)
1J	27	Engine Room Main Wire and Engine Room J/B (Engine Compartment Left)
2A	30	Instrument Panel Wire and Instrument Panel J/B (Cowl Side Panel LH)
2B		
2D		
2G	31	Engine Room Main Wire and Instrument Panel J/B (Cowl Side Panel LH)
2H		
2K	31	Cowl Wire and Instrument Panel J/B (Cowl Side Panel LH)

: CONNECTOR JOINING WIRE HARNESS AND WIRE HARNESS

Code	See Page	Joining Wire Harness and Wire Harness (Connector Location)
ID2	42	Instrument Panel Wire and Cowl Wire (Left Kick Panel)

▽ : GROUND POINTS

Code	See Page	Ground Points Location
ID	42	Cowl Side Panel LH
IF	42	Left Kick Panel
IG	42	Cowl Side Panel RH
IH	42	Right Kick Panel

TURN SIGNAL AND HAZARD WARNING LIGHT

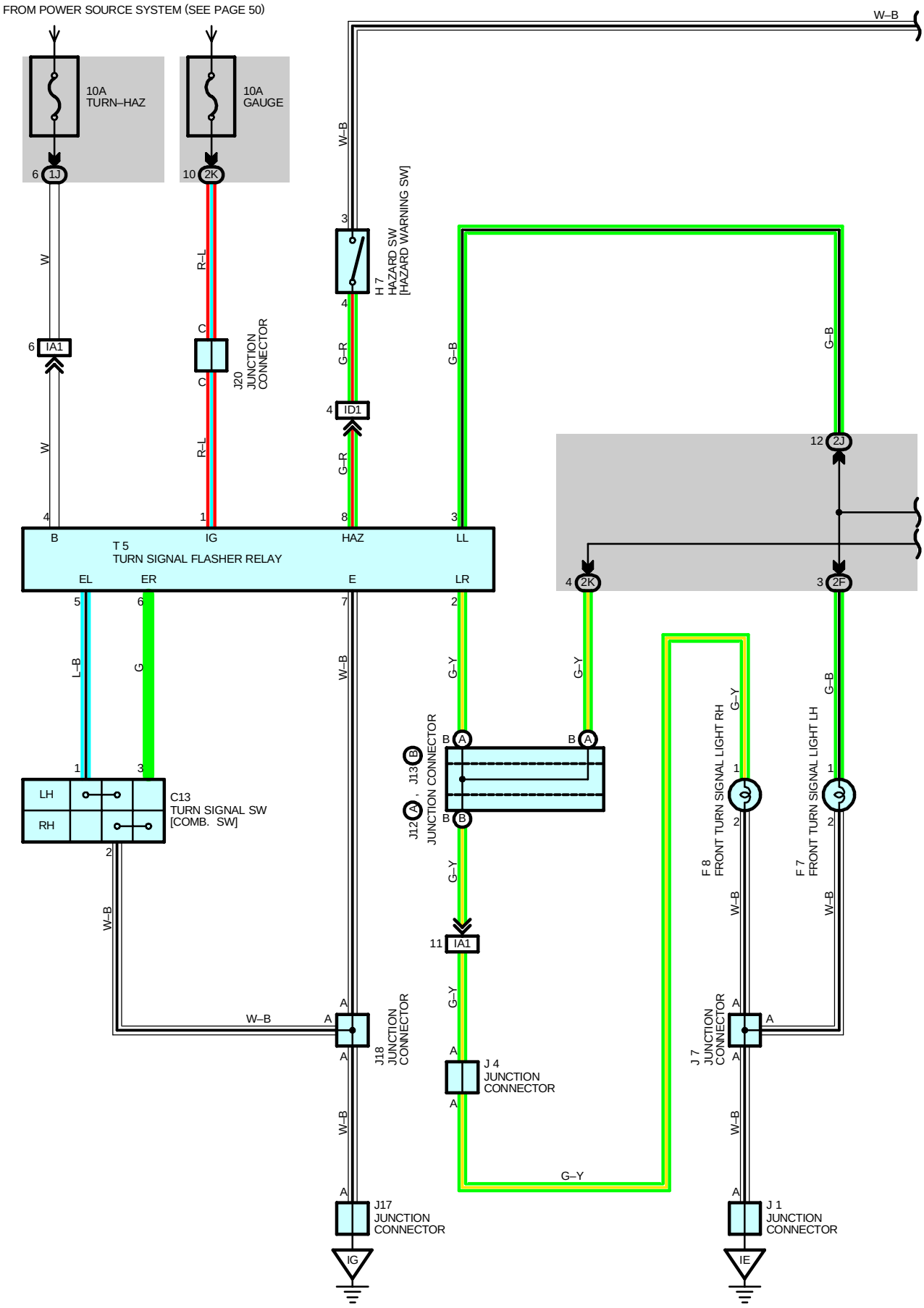

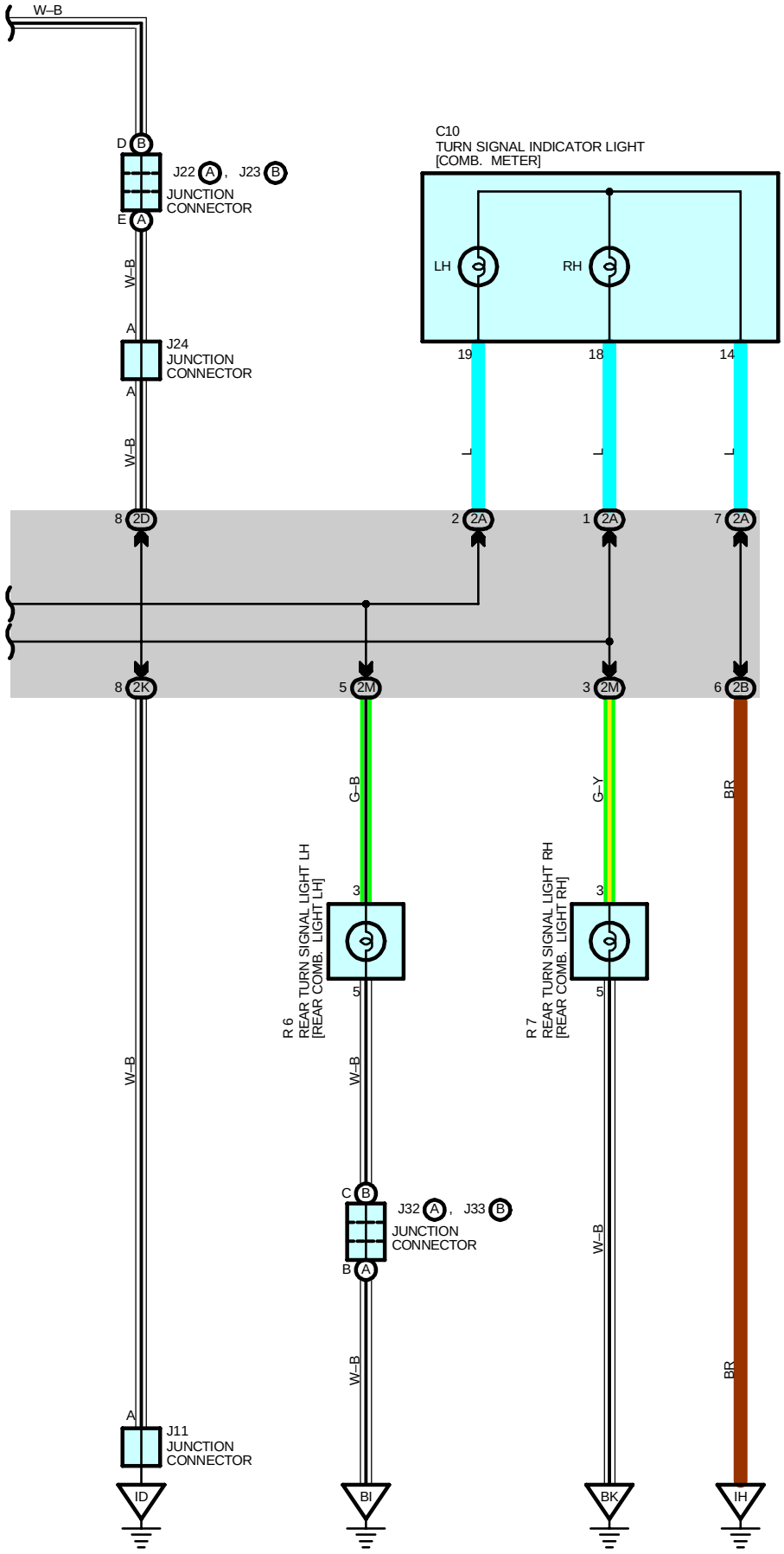
W–B
D B
J22 A , J23 B
JUNCTION CONNECTOR
E A
W–B
A
J24
JUNCTION CONNECTOR
A
W–B
C10
TURN SIGNAL INDICATOR LIGHT [COMB. METER]
LH
RH
19
18
14
L
L
L
8 2D
2 2A
1 2A
7 2A
8 2K
5 2M
3 2M
6 2B
G–B
G–Y
BR
R 6
REAR TURN SIGNAL LIGHT LH [REAR COMB. LIGHT LH]
R 7
REAR TURN SIGNAL LIGHT RH [REAR COMB. LIGHT RH]
3
5
W–B
C B
J32 A , J33 B
JUNCTION CONNECTOR
B A
W–B
BR
A
J11
JUNCTION CONNECTOR
ID
BI
BK
IH

TURN SIGNAL AND HAZARD WARNING LIGHT

SERVICE HINTS

T5 TURN SIGNAL FLASHER RELAY

1–GROUND : Approx. **12** volts with the ignition SW at **ON** position
4–GROUND : Always approx. **12** volts
2, 3–GROUND : Changes from approx. **12** to **0** volts with the ignition SW at **ON** position and the turn signal SW at **LEFT** or **RIGHT** position or the hazard SW at **ON** position
5–GROUND : Continuity with the ignition SW at **ON** position and the turn signal SW at **LEFT** position
6–GROUND : Continuity with the ignition SW at **ON** position and the turn signal SW at **RIGHT** position
8–GROUND : Continuity with the hazard SW at **ON** position
7–GROUND : Always continuity

○ : PARTS LOCATION

Code	See Page	Code	See Page	Code	See Page
C10	36	J11	37	J24	37
C13	36	J12 A	37	J32 A	38
F7	34	J13 B	37	J33 B	38
F8	34	J17	37	R6	39
H7	37	J18	37	R7	39
J1	37	J20	37	T5	37
J4	37	J22 A	37		
J7	37	J23 B	37		

: JUNCTION BLOCK AND WIRE HARNESS CONNECTOR

Code	See Page	Junction Block and Wire Harness (Connector Location)
1J	27	Engine Room Main Wire and Engine Room J/B (Engine Compartment Left)
2A	30	Instrument Panel Wire and Instrument Panel J/B (Cowl Side Panel LH)
2B		
2D		
2F	31	Engine Room Main Wire and Instrument Panel J/B (Cowl Side Panel LH)
2J	31	Cowl Wire and Instrument Panel J/B (Cowl Side Panel LH)
2K		
2M	31	Floor Wire and Instrument Panel J/B (Cowl Side Panel LH)

: CONNECTOR JOINING WIRE HARNESS AND WIRE HARNESS

Code	See Page	Joining Wire Harness and Wire Harness (Connector Location)
IA1	42	Engine Room Main Wire and Cowl Wire (Cowl Side Panel LH)
ID1	42	Instrument Panel Wire and Cowl Wire (Left Kick Panel)

▽ : GROUND POINTS

Code	See Page	Ground Points Location
ID	42	Cowl Side Panel LH
IE		
IG	42	Cowl Side Panel RH
IH	42	Right Kick Panel
BI	46	Left Side of Rear Pillar
BK	46	Back Panel Center

STOP LIGHT

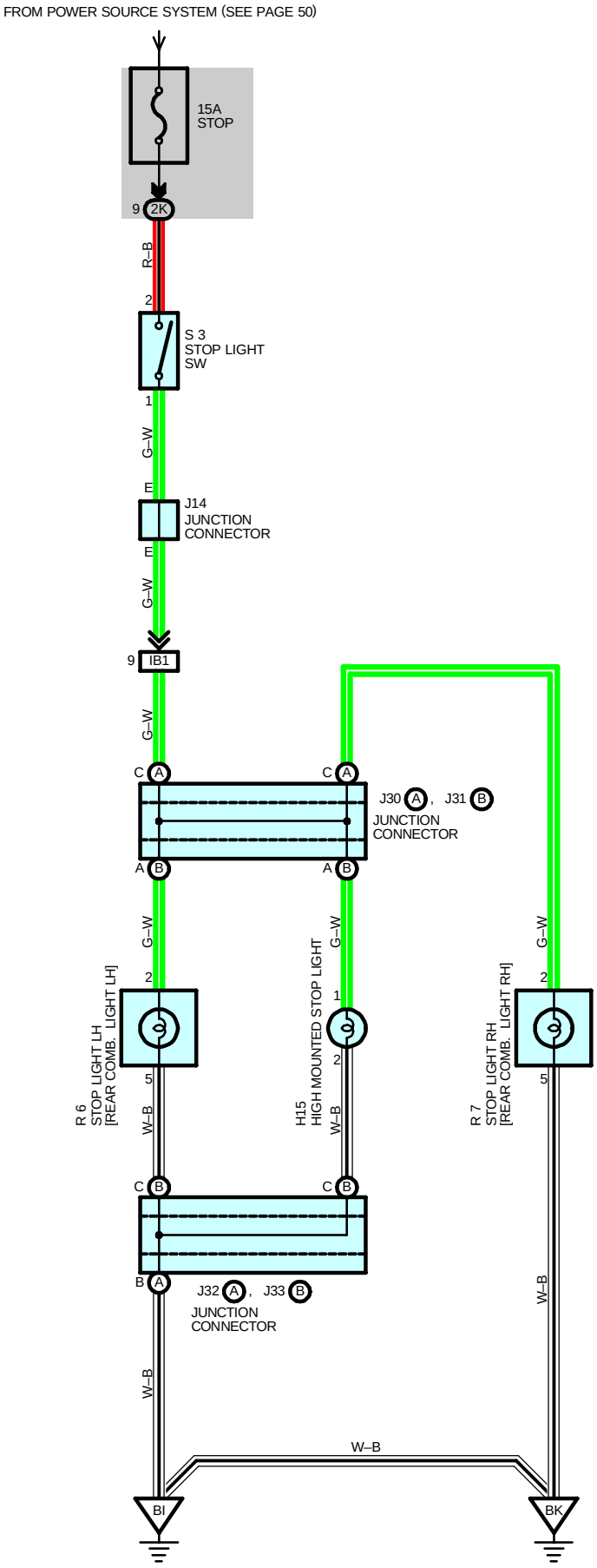
FROM POWER SOURCE SYSTEM (SEE PAGE 50)
15A
STOP
9 2K
R–B
2
S 3
STOP LIGHT
SW
1
G–W
E
J14
JUNCTION
CONNECTOR
E
G–W
9 IB1
G–W
C A
C A
J30 A , J31 B
JUNCTION
CONNECTOR
A B
A B
G–W
G–W
G–W
2
1
2
R 6
STOP LIGHT LH
[REAR COMB. LIGHT LH]
H15
HIGH MOUNTED STOP LIGHT
R 7
STOP LIGHT RH
[REAR COMB. LIGHT RH]
5
W–B
W–B
W–B
C B
C B
B A
J32 A , J33 B
JUNCTION
CONNECTOR
W–B
W–B
W–B
BI
BK

SERVICE HINTS

S3 STOP LIGHT SW

2–1 : Closed with the brake pedal depressed

: PARTS LOCATION

Code	See Page	Code	See Page	Code	See Page
H15	38	J31 B	38	R6	39
J14	37	J32 A	38	R7	39
J30 A	38	J33 B	38	S3	37

: JUNCTION BLOCK AND WIRE HARNESS CONNECTOR

Code	See Page	Junction Block and Wire Harness (Connector Location)
2K	31	Cowl Wire and Instrument Panel J/B (Cowl Side Panel LH)

: CONNECTOR JOINING WIRE HARNESS AND WIRE HARNESS

Code	See Page	Joining Wire Harness and Wire Harness (Connector Location)
IB1	42	Floor Wire and Cowl Wire (Cowl Side Panel LH)

: GROUND POINTS

Code	See Page	Ground Points Location
BI	46	Left Side of Rear Pillar
BK	46	Back Panel Center

BACK–UP LIGHT

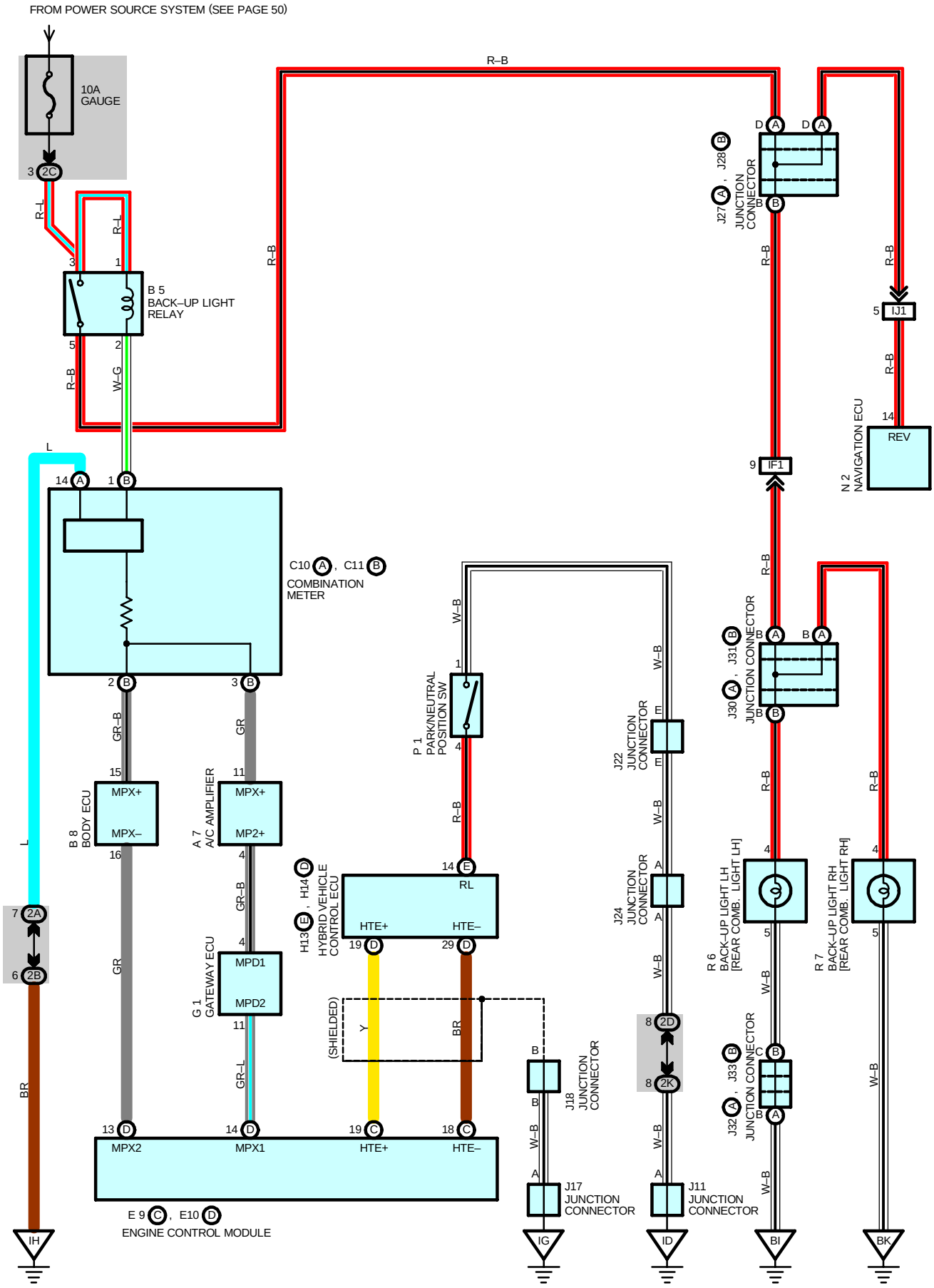

SERVICE HINTS

P1 PARK/NEUTRAL POSITION SW

4–1 : Closed with the shift lever at **R** position

B5 BACK–UP LIGHT RELAY

3–5 : Closed with the shift lever at **R** position

: PARTS LOCATION

Code	See Page	Code	See Page	Code	See Page
A7	36	H14 D	37	J31 B	38
B5	36	J11	37	J32 A	38
B8	36	J17	37	J33 B	38
C10 A	36	J18	37	N2	39
C11 B	36	J22	37	P1	37
E9 C	36	J24	37	R6	39
E10 D	36	J27 A	37	R7	39
G1	37	J28 B	37		
H13 E	37	J30 A	38		

: JUNCTION BLOCK AND WIRE HARNESS CONNECTOR

Code	See Page	Junction Block and Wire Harness (Connector Location)
2A	30	Instrument Panel Wire and Instrument Panel J/B (Cowl Side Panel LH)
2B		
2C		
2D		
2K	31	Cowl Wire and Instrument Panel J/B (Cowl Side Panel LH)

: CONNECTOR JOINING WIRE HARNESS AND WIRE HARNESS

Code	See Page	Joining Wire Harness and Wire Harness (Connector Location)
IF1	42	Instrument Panel Wire and Floor Wire (Left Kick Panel)
IJ1	44	Floor No.3 Wire and Instrument Panel Wire (Under the Instrument Panel Center)

: GROUND POINTS

Code	See Page	Ground Points Location
ID	42	Cowl Side Panel LH
IG	42	Cowl Side Panel RH
IH	42	Right Kick Panel
BI	46	Left Side of Rear Pillar
BK	46	Back Panel Center

LIGHT AUTO TURN OFF

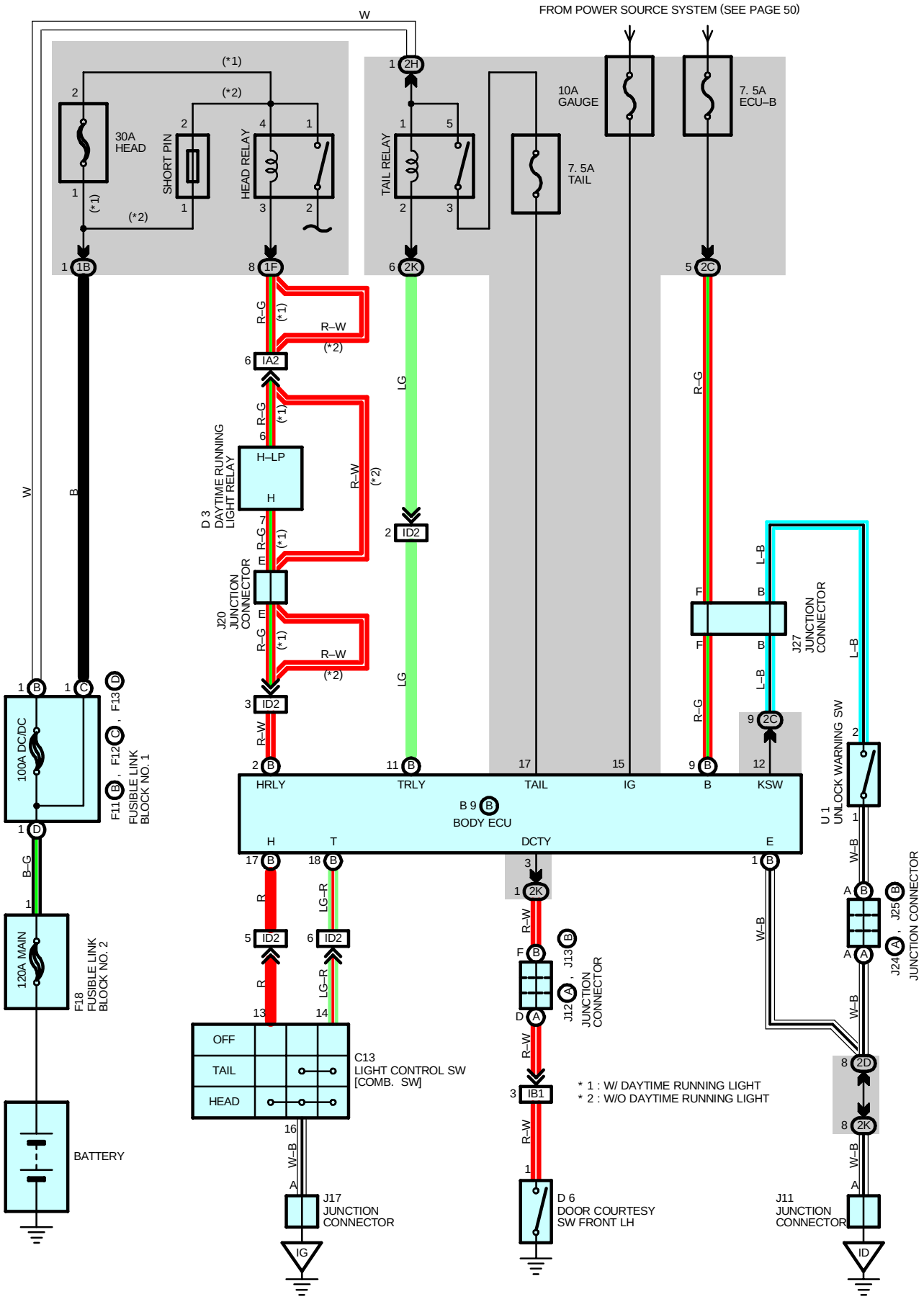

SYSTEM OUTLINE

With the ignition SW turned on, the current flows to TERMINAL 15 of the body ECU through GAUGE fuse.
Voltage is applied at all times to TERMINAL (A) 11 of the body ECU through the TAIL relay. Coil side, and to TERMINAL (A) 2 through the HEAD relay coil side (w/o daytime running light) or through the daytime running light relay (w/ daytime running light).

1. NORMAL LIGHTING OPERATION

<Turn taillight on>
With the light control SW turned to TAIL position, a signal is input into TERMINAL (A) 18 of the body ECU. Due to this signal, the current flowing to TERMINAL (A) 11 of the body ECU flows to TERMINAL (A) 18 to TERMINAL 14 of the light control SW to TERMINAL 16 to GROUND, and taillight relay causes taillights to turn on.

<Turn headlight on>
With the light control SW turned to HEAD position, a signal is input into TERMINALS (A) 17 and (A) 18 of the body ECU. Due to this signal, the current flowing to TERMINAL (A) 2 of the body ECU flows to TERMINAL (A) 17 to TERMINAL 13 of the light control SW to TERMINAL 16 to GROUND in the headlight circuit, and causes taillight and HEAD relay to turn the lights on. The taillight circuit is same as above.

2. LIGHT AUTO TURN OFF OPERATION

With light on and ignition SW turned off (Input signal goes to TERMINAL 15 of the body ECU), when the driver's door is opened (Input signal goes to TERMINAL 3 of the body ECU), the ECU operates and the current is cut off which flows from TERMINAL (A) 11 of the body ECU to TERMINAL (A) 18 in taillight circuit and from TERMINAL (A) 2 to TERMINAL (A) 17 in headlight circuit.
As a result, all lights are turned off automatically.

SERVICE HINTS

HEAD RELAY

2–1 : Closed with the light control SW at **HEAD** position or the dimmer SW at **FLASH** position
Closed with the engine running and the parking brake lever released (Parking brake SW off) [w/ daytime running light]

TAIL RELAY

3–5 : Closed with the light control SW at **TAIL** or **HEAD** position

D6 DOOR COURTESY SW LH

1–GROUND : Continuity with the front LH door open

B9 (B) BODY ECU

15–GROUND : Approx. **12** volts with the ignition SW at **ON** position
3–GROUND : Continuity with the front LH door open
(B) 9–GROUND : Always approx. **12** volts
(B) 1–GROUND : Always continuity
(B) 2–GROUND : Continuity with the light control SW at **HEAD** position
(B)11–GROUND : Continuity with the light control SW at **TAIL** or **HEAD** position

: PARTS LOCATION

Code	See Page	Code	See Page	Code	See Page
B9 B	36	F13 D	34	J20	37
C13	36	F18	38	J24 A	37
D3	36	J11	37	J25 B	37
D6	38	J12 A	37	J27	37
F11 B	34	J13 B	37	U1	37
F12 C	34	J17	37		

: JUNCTION BLOCK AND WIRE HARNESS CONNECTOR

Code	See Page	Junction Block and Wire Harness (Connector Location)
1B	27	Engine Room Main Wire and Engine Room J/B (Engine Compartment Left)
1F		
2C	30	Instrument Panel Wire and Instrument Panel J/B (Cowl Side Panel LH)
2D		
2H	31	Engine Room Main Wire and Instrument Panel J/B (Cowl Side Panel LH)
2K	31	Cowl Wire and Instrument Panel J/B (Cowl Side Panel LH)

LIGHT AUTO TURN OFF

: CONNECTOR JOINING WIRE HARNESS AND WIRE HARNESS

Code	See Page	Joining Wire Harness and Wire Harness (Connector Location)
IA2	42	Engine Room Main Wire and Cowl Wire (Cowl Side Panel LH)
IB1	42	Floor Wire and Cowl Wire (Cowl Side Panel LH)
ID2	42	Instrument Panel Wire and Cowl Wire (Left Kick Panel)

: GROUND POINTS

Code	See Page	Ground Points Location
ID	42	Cowl Side Panel LH
IG	42	Cowl Side Panel RH

INTERIOR LIGHT

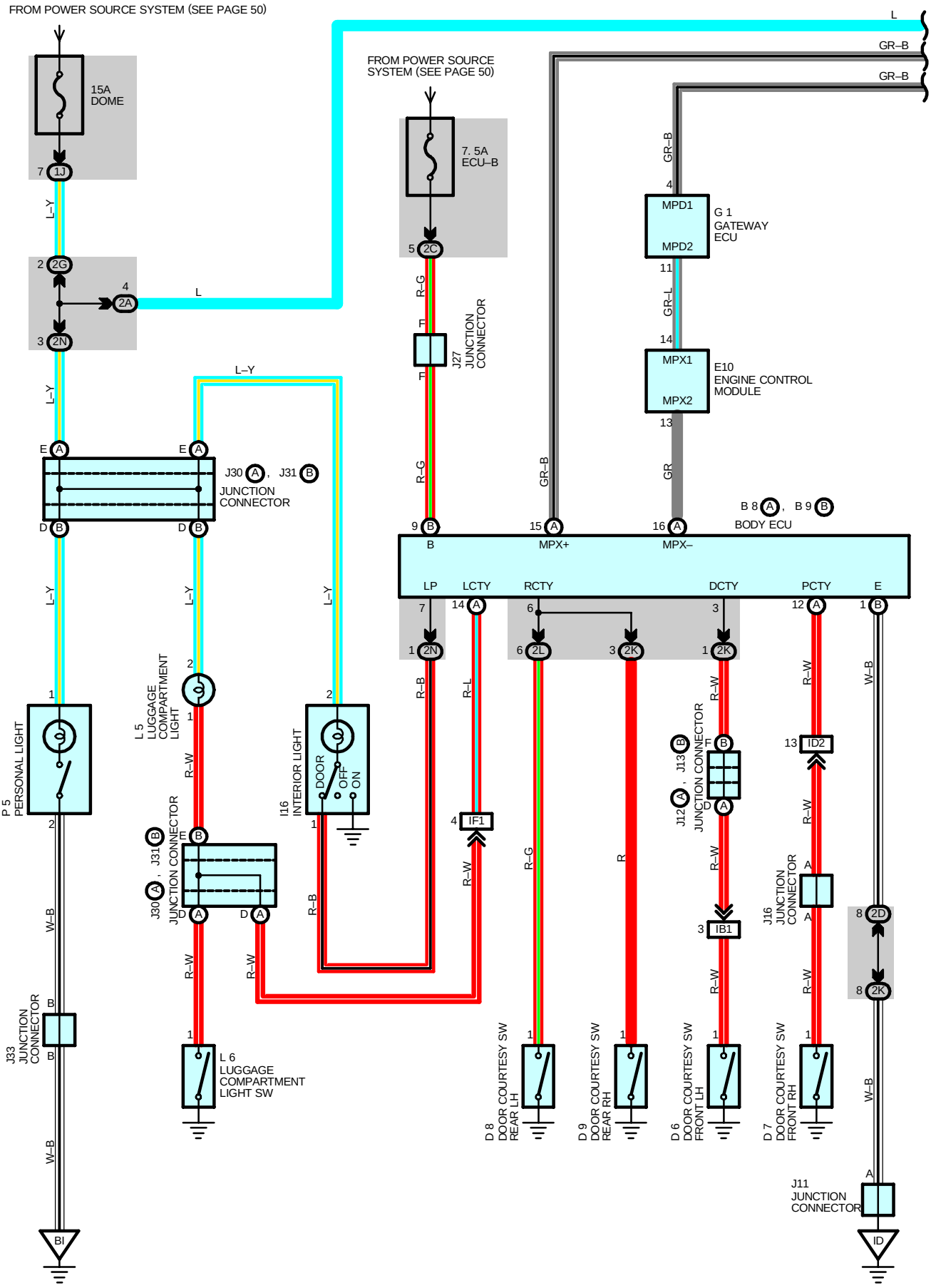

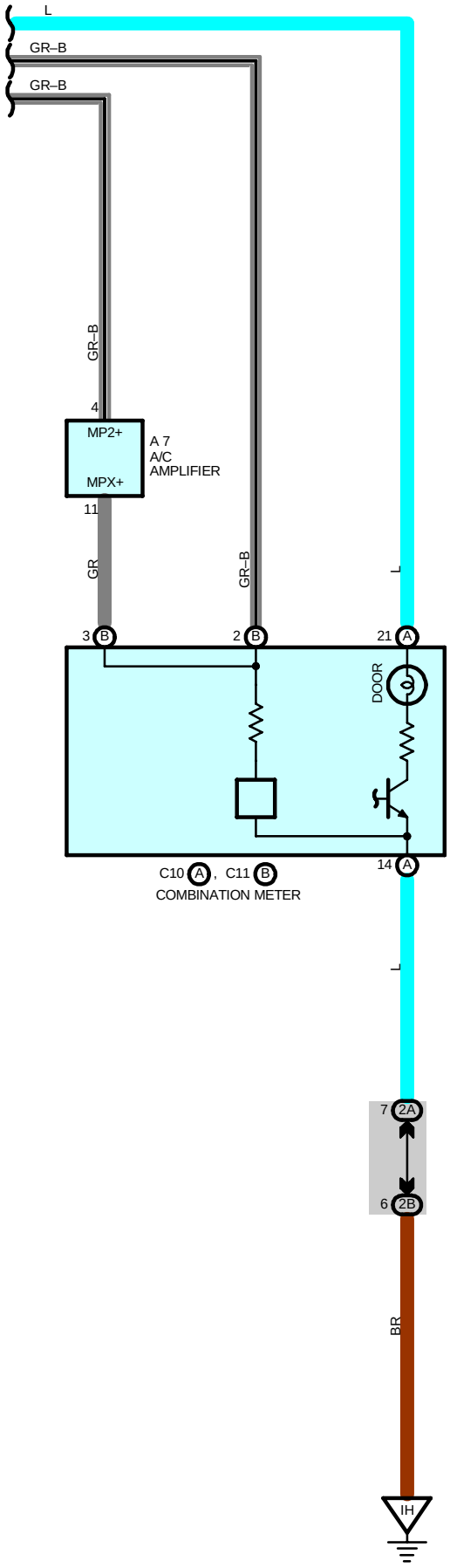
L
GR–B
GR–B
GR–B
4
MP2+
MPX+
A 7
A/C
AMPLIFIER
11
GR
GR–B
L
3 B
2 B
21 A
DOOR
14 A
C10 A , C11 B
COMBINATION METER
L
7 2A
6 2B
BR
IH

INTERIOR LIGHT

SERVICE HINTS

B8 (A), B9 (B) BODY ECU

3–GROUND : Continuity with front LH door open
6–GROUND : Continuity with rear LH, RH door open
(A)14–GROUND : Continuity with front RH door open
(B) 9–GROUND : Always approx. **12** volts

L6 LUGGAGE COMPARTMENT LIGHT SW

1–GROUND : Closed with the luggage compartment door open

: PARTS LOCATION

Code	See Page	Code	See Page	Code	See Page
A7	36	D9	38	J27	37
B8 A	36	E10	36	J30 A	38
B9 B	36	G1	37	J31 B	38
C10 A	36	I16	38	J33	38
C11 B	36	J11	37	L5	38
D6	38	J12 A	37	L6	38
D7	38	J13 B	37	P5	39
D8	38	J16	37		

: JUNCTION BLOCK AND WIRE HARNESS CONNECTOR

Code	See Page	Junction Block and Wire Harness (Connector Location)
1J	27	Engine Room Main Wire and Engine Room J/B (Engine Compartment Left)
2A	30	Instrument Panel Wire and Instrument Panel J/B (Cowl Side Panel LH)
2B		
2C		
2D		
2G	31	Engine Room Main Wire and Instrument Panel J/B (Cowl Side Panel LH)
2K	31	Cowl Wire and Instrument Panel J/B (Cowl Side Panel LH)
2L	31	Floor Wire and Instrument Panel J/B (Cowl Side Panel LH)
2N		

: CONNECTOR JOINING WIRE HARNESS AND WIRE HARNESS

Code	See Page	Joining Wire Harness and Wire Harness (Connector Location)
IB1	42	Floor Wire and Cowl Wire (Cowl Side Panel LH)
ID2	42	Instrument Panel Wire and Cowl Wire (Left Kick Panel)
IF1	42	Instrument Panel Wire and Floor Wire (Left Kick Panel)

: GROUND POINTS

Code	See Page	Ground Points Location
ID	42	Cowl Side Panel LH
IH	42	Right Kick Panel
BI	46	Left Side of Rear Pillar

MULTIPLEX COMMUNICATION SYSTEM (COMMUNICATION BUS)

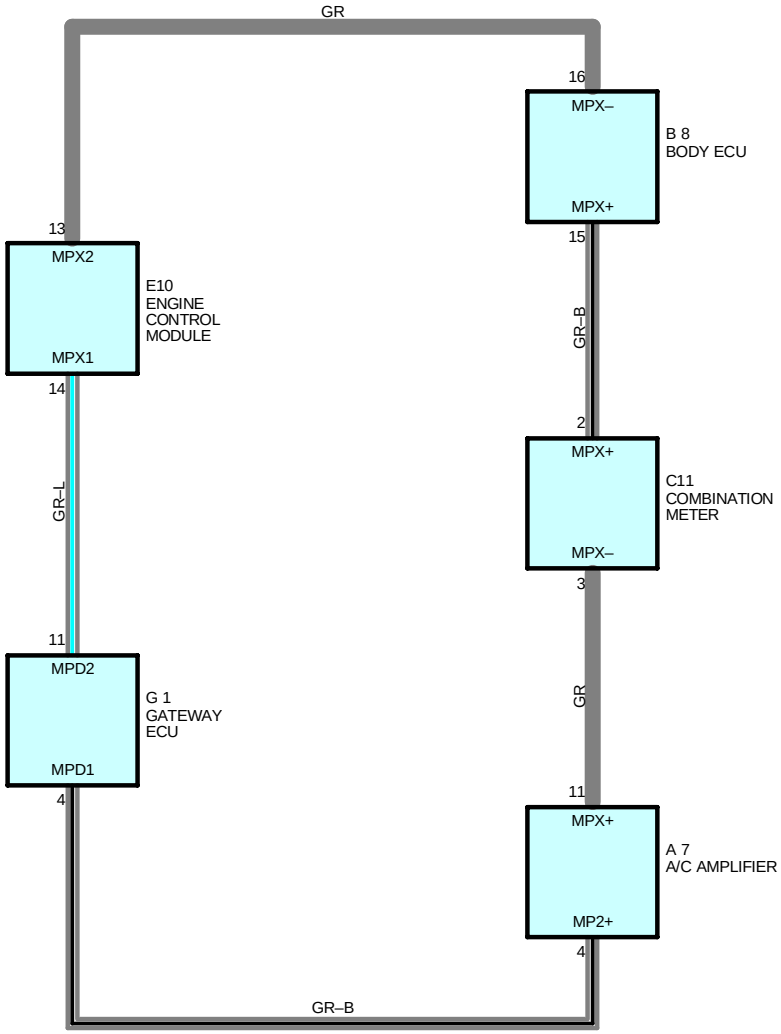

KEY REMINDER AND LIGHT REMINDER BUZZER

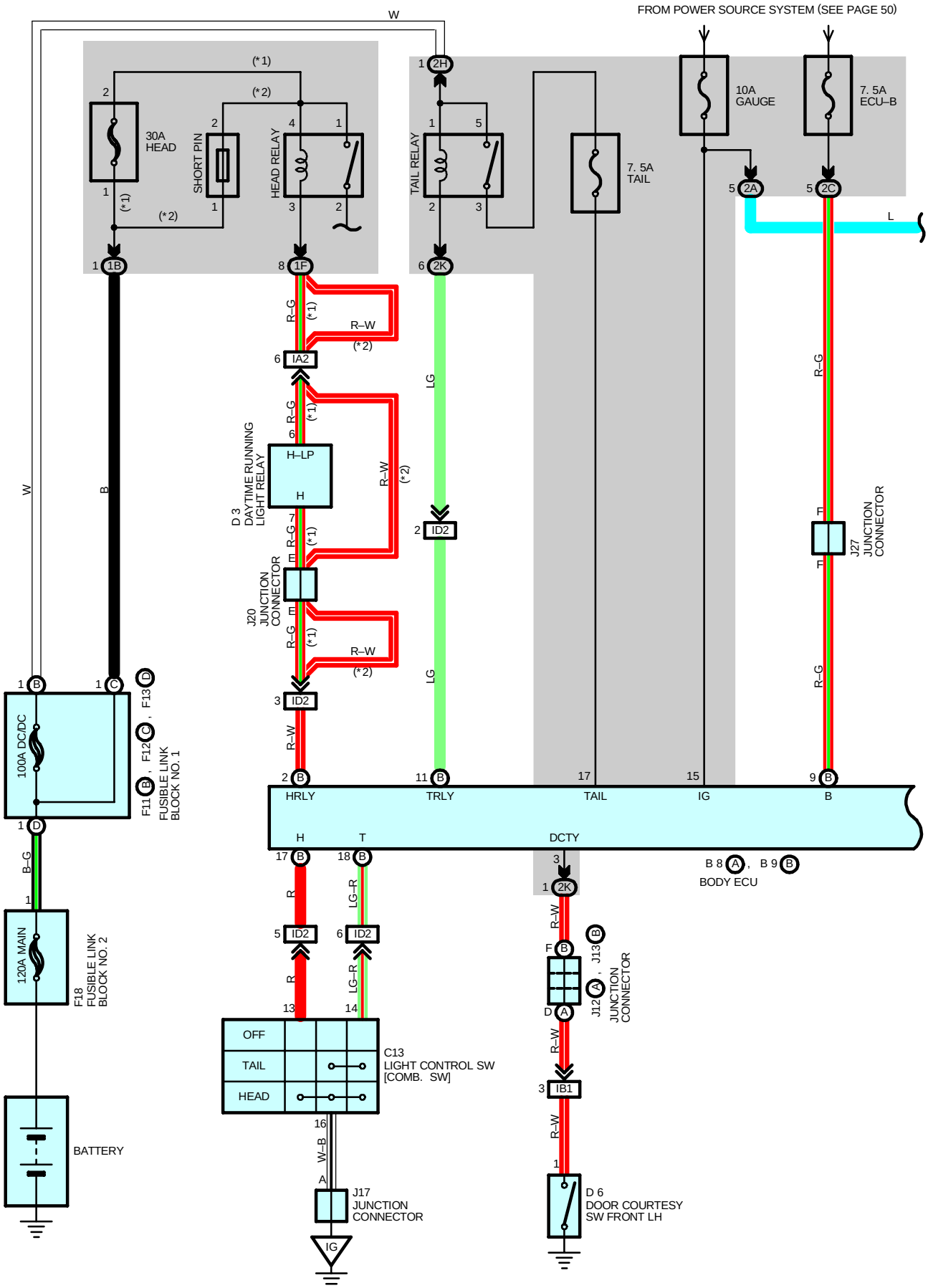

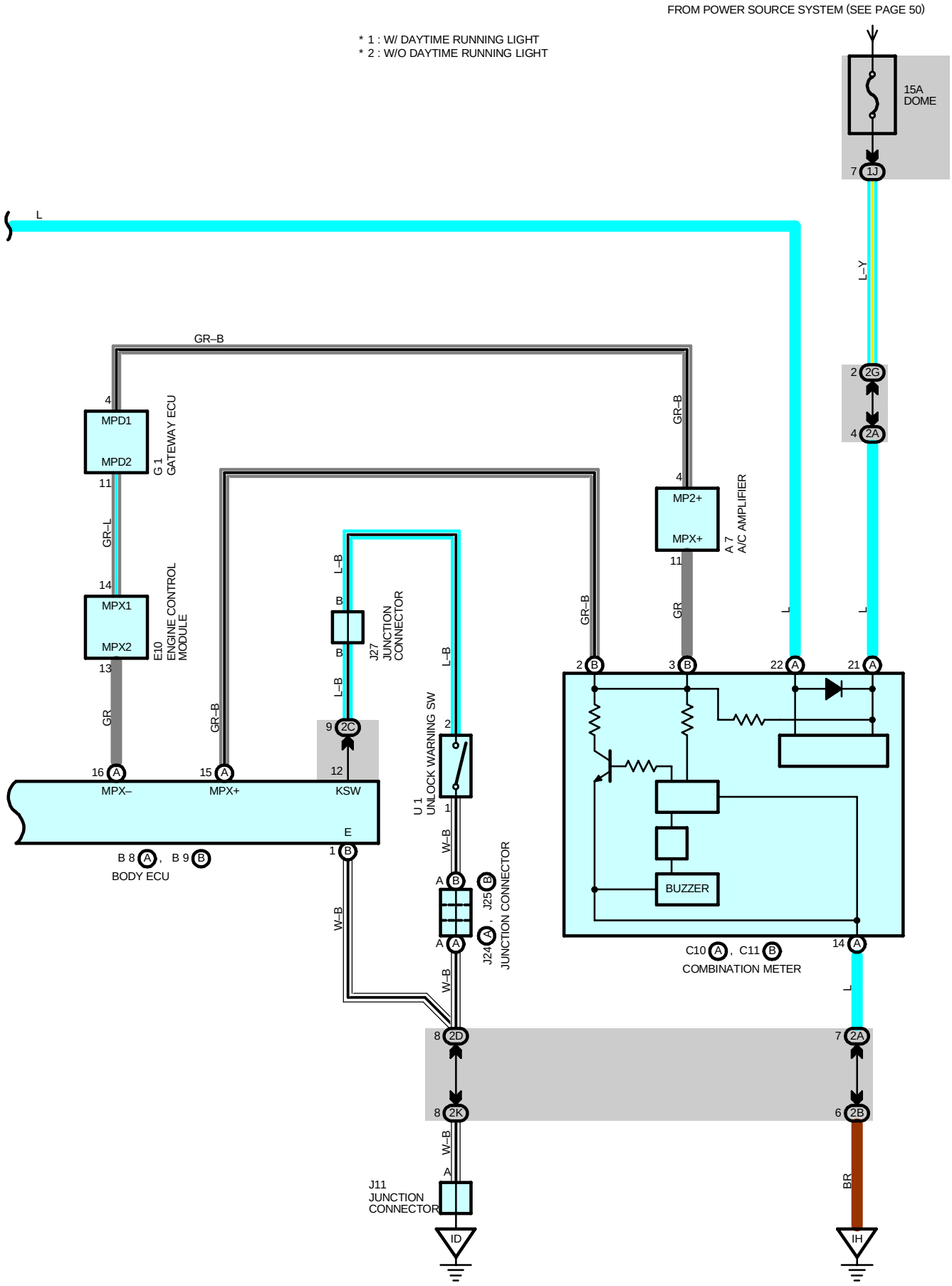
FROM POWER SOURCE SYSTEM (SEE PAGE 50)
* 1 : W/ DAYTIME RUNNING LIGHT
* 2 : W/O DAYTIME RUNNING LIGHT
15A
DOME
7 1J
L
L–Y
2 2G
4 2A
GR–B
4
MPD1
MPD2
11
G 1
GATEWAY ECU
GR–L
14
MPX1
MPX2
13
E10
ENGINE CONTROL
MODULE
GR
16 A
MPX–
15 A
MPX+
12
KSW
E
1 B
B 8 A , B 9 B
BODY ECU
GR–B
L–B
B
B
J27
JUNCTION
CONNECTOR
L–B
9 2C
U 1
UNLOCK WARNING SW
2
1
W–B
A B
A A
J25 , J24
JUNCTION CONNECTOR
W–B
W–B
8 2D
8 2K
W–B
A
J11
JUNCTION
CONNECTOR
ID
GR–B
4
MP2+
MPX+
11
A 7
A/C AMPLIFIER
GR
2 B
3 B
22 A
21 A
BUZZER
C10 A , C11 B
COMBINATION METER
14 A
L
7 2A
6 2B
BR
IH

KEY REMINDER AND LIGHT REMINDER BUZZER

SYSTEM OUTLINE

The current always flows from GAUGE fuse to body ECU TERMINAL 15.

1. LIGHT REMINDER BUZZER SYSTEM

If you open the door of the driver's side when either headlight or taillight is on with ignition SW being off, the buzzer comes on.

2. KEY REMINDER BUZZER SYSTEM

If you open the door of the driver's side when the ignition key is inserted in ignition SW being off, the buzzer comes on.

SERVICE HINTS

B8 (A), B9 (B) BODY ECU

(B) 9–GROUND : Always approx. **12** volts
(B) 1–GROUND : Always continuity
12–GROUND : Continuity with the ignition key in cylinder

D6 DOOR COURTESY SW FRONT LH

1–GROUND : Closed with the driver's door open

C10 (A) COMBINATION METER

(A)22–GROUND : Approx. **12** volts with the ignition SW at **ON** position
(A)21–GROUND : Always approx. **12** volts
(A)14–GROUND : Always continuity

○ : PARTS LOCATION

Code	See Page	Code	See Page	Code	See Page
A7	36	E10	36	J13 B	37
B8 A	36	F11 B	34	J17	37
B9 B	36	F12 C	34	J20	37
C10 A	36	F13 D	34	J24 A	37
C11 B	36	F18	38	J25 B	37
C13	36	G1	37	J27	37
D3	36	J11	37	U1	37
D6	38	J12 A	37		

⬭ : JUNCTION BLOCK AND WIRE HARNESS CONNECTOR

Code	See Page	Junction Block and Wire Harness (Connector Location)
1B	27	Engine Room Main Wire and Engine Room J/B (Engine Compartment Left)
1F		
1J		
2A	30	Instrument Panel Wire and Instrument Panel J/B (Cowl Side Panel LH)
2B		
2C		
2D		
2G	31	Engine Room Main Wire and Instrument Panel J/B (Cowl Side Panel LH)
2H		
2K	31	Cowl Wire and Instrument Panel J/B (Cowl Side Panel LH)

▭ : CONNECTOR JOINING WIRE HARNESS AND WIRE HARNESS

Code	See Page	Joining Wire Harness and Wire Harness (Connector Location)
IA2	42	Engine Room Main Wire and Cowl Wire (Cowl Side Panel LH)
IB1	42	Floor Wire and Cowl Wire (Cowl Side Panel LH)
ID2	42	Instrument Panel Wire and Cowl Wire (Left Kick Panel)

▽ **: GROUND POINTS**

Code	See Page	Ground Points Location
ID	42	Cowl Side Panel LH
IG	42	Cowl Side Panel RH
IH	42	Right Kick Panel

SEAT BELT WARNING

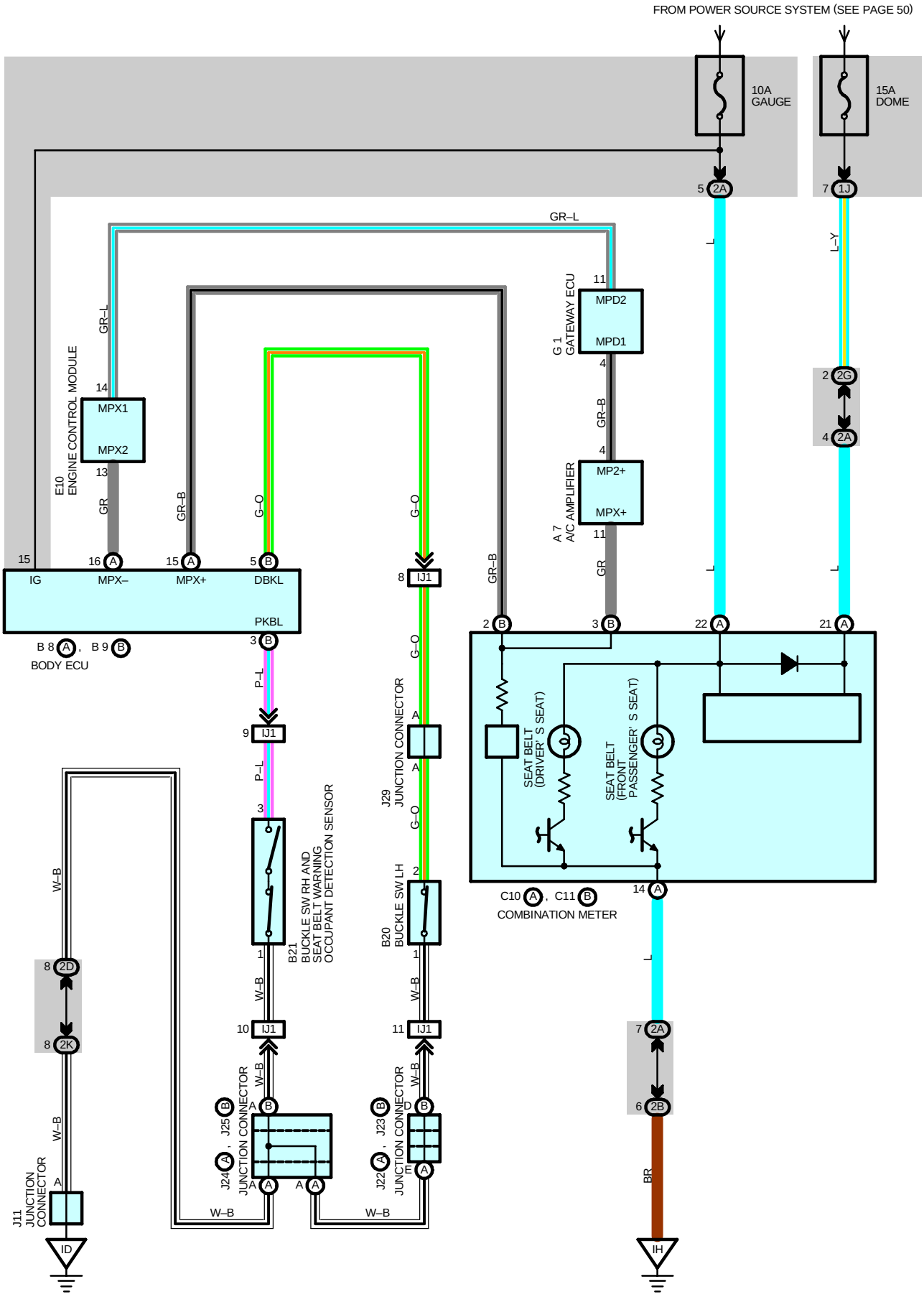

SYSTEM OUTLINE

When the driver has not fastened the seat belt while the ignition SW is ON, the driver seat belt warning light blinks, and a warning buzzer comes on.
Also, in the front passenger seat, a sensor recognizes a passenger, and when the passenger has not fastened the seat belt, the front passenger seat belt warning light blinks.

SERVICE HINTS

B20 BUCKLE SW LH

1–2 : Closed with driver's seat belt in use

: PARTS LOCATION

Code	See Page	Code	See Page	Code	See Page
A7	36	C10 A	36	J22 A	37
B8 A	36	C11 B	36	J23 B	37
B9 B	36	E10	36	J24 A	37
B20	38	G1	37	J25 B	37
B21	38	J11	37	J29	37

: JUNCTION BLOCK AND WIRE HARNESS CONNECTOR

Code	See Page	Junction Block and Wire Harness (Connector Location)
1J	27	Engine Room Main Wire and Engine Room J/B (Engine Compartment Left)
2A	30	Instrument Panel Wire and Instrument Panel J/B (Cowl Side Panel LH)
2B		
2D		
2G	31	Engine Room Main Wire and Instrument Panel J/B (Cowl Side Panel LH)
2K	31	Cowl Wire and Instrument Panel J/B (Cowl Side Panel LH)

: CONNECTOR JOINING WIRE HARNESS AND WIRE HARNESS

Code	See Page	Joining Wire Harness and Wire Harness (Connector Location)
IJ1	44	Floor No.3 Wire and Instrument Panel Wire (Under the Instrument Panel Center)

: GROUND POINTS

Code	See Page	Ground Points Location
ID	42	Cowl Side Panel LH
IH	42	Right Kick Panel

WIPER AND WASHER

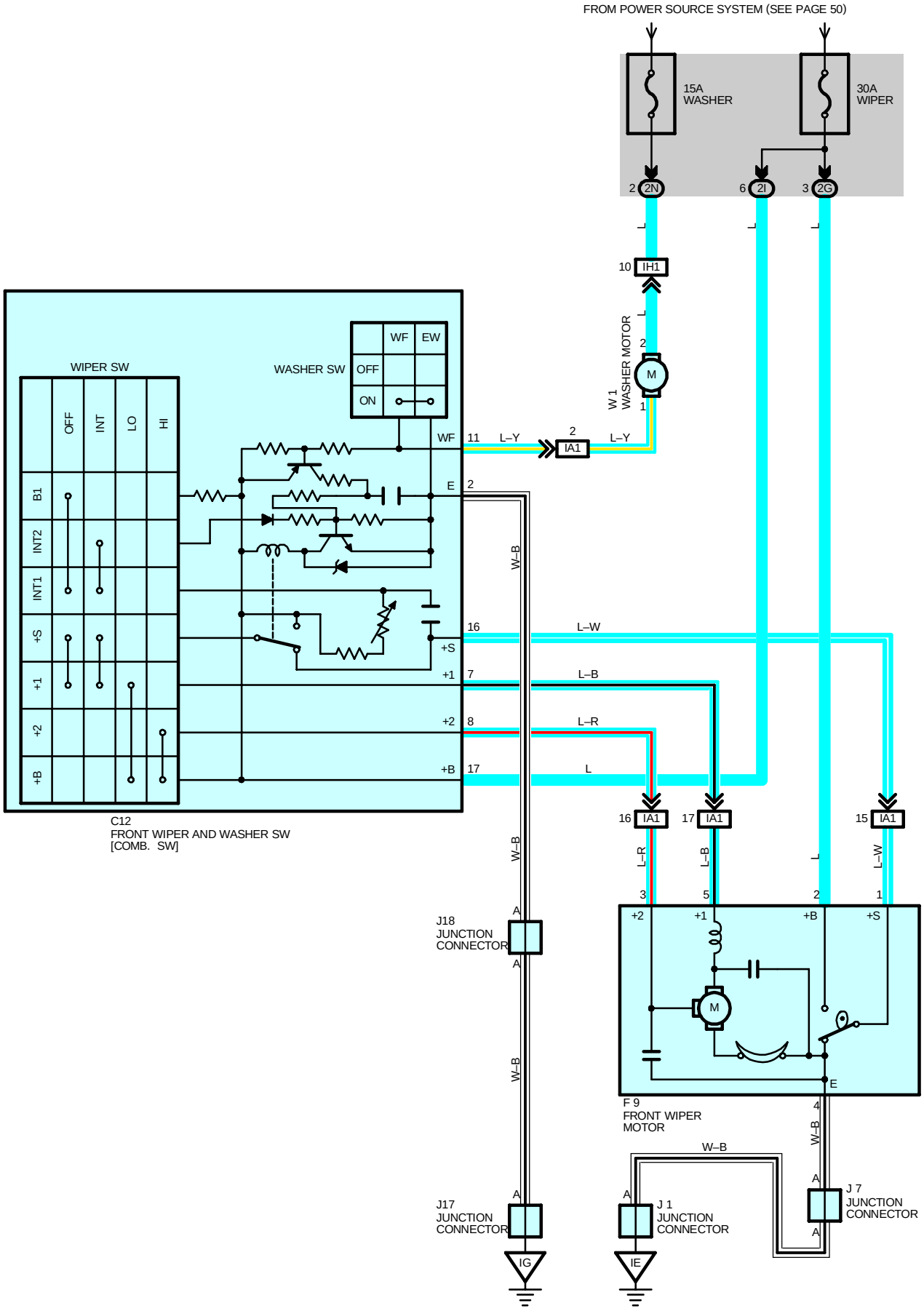

SYSTEM OUTLINE

When the ignition SW is turned ON, the current flows from WIPER fuse to wiper and washer SW TERMINAL 17 and front wiper motor TERMINAL 2 or the current flows from WASHER fuse to washer motor TERMINAL 2.

1. LO POSITION

When the wiper and washer SW is at LO position, the current flows from wiper and washer SW TERMINAL 17 to TERMINAL 7 to front wiper motor TERMINAL 5 to TERMINAL 4 to GROUND, and the front wiper motor runs at low speed.

2. HI POSITION

When the wiper and washer SW is at HI position, the current flows from wiper and washer SW TERMINAL 17 to TERMINAL 8 to front wiper motor TERMINAL 3 to TERMINAL 4 to GROUND, and the front wiper motor runs at high speed.

3. INT POSITION

When the wiper and washer SW is at INT position, the wiper relay is activated and the current flows from wiper and washer SW TERMINAL 17 to TERMINAL 2 to GROUND. This current activates the intermittent circuit, and the current flows from wiper and washer SW TERMINAL 17 to TERMINAL 7 to front wiper motor TERMINAL 5 to TERMINAL 4 to GROUND, and operates the front wipers.

4. WASHER CONTINUOUS OPERATION

When the wiper and washer SW is pulled to WASHER position (Washer SW ON position), the current from the WASHER fuse flows to washer motor TERMINAL 2 to TERMINAL 1 to wiper and washer SW TERMINAL 11 to TERMINAL 2 to GROUND, and operates the washer motor to emit a water spray. At the same time, the current flows from the WIP fuse to wiper and washer SW TERMINAL 17 to TERMINAL 7 to front wiper motor TERMINAL 5 to TERMINAL 4 to GROUND, and operates the front wiper motor.

SERVICE HINTS

C12 FRONT WIPER AND WASHER SW

2–GROUND : Always continuity
7–GROUND : Approx. **12** volts with the front wiper and washer SW at **LO** position
Approx. **2** to **12** seconds intermittently with the front wiper and washer SW at **INT** position
8–GROUND : Approx. **12** volts with the front wiper and washer SW at **HI** position
16–GROUND : Approx. **12** volts with the ignition SW on unless the front wiper motor at **STOP** position
17–GROUND : Approx. **12** volts the ignition SW at **ON** or **ST** position

F9 FRONT WIPER MOTOR

2–1 : Closed unless the wiper motor at **STOP** position

: PARTS LOCATION

Code	See Page	Code	See Page	Code	See Page
C12	36	J7	37	W1	35
F9	34	J17	37		
J1	37	J18	37		

: JUNCTION BLOCK AND WIRE HARNESS CONNECTOR

Code	See Page	Junction Block and Wire Harness (Connector Location)
2G	31	Engine Room Main Wire and Instrument Panel J/B (Cowl Side Panel LH)
2I	31	Cowl Wire and Instrument Panel J/B (Cowl Side Panel LH)
2N	31	Floor Wire and Instrument Panel J/B (Cowl Side Panel LH)

: CONNECTOR JOINING WIRE HARNESS AND WIRE HARNESS

Code	See Page	Joining Wire Harness and Wire Harness (Connector Location)
IA1	42	Engine Room Main Wire and Cowl Wire (Cowl Side Panel LH)
IH1	42	Floor Wire and Engine Room Main Wire (Left Kick Panel)

: GROUND POINTS

Code	See Page	Ground Points Location
IE	42	Cowl Side Panel LH
IG	42	Cowl Side Panel RH

CIGARETTE LIGHTER

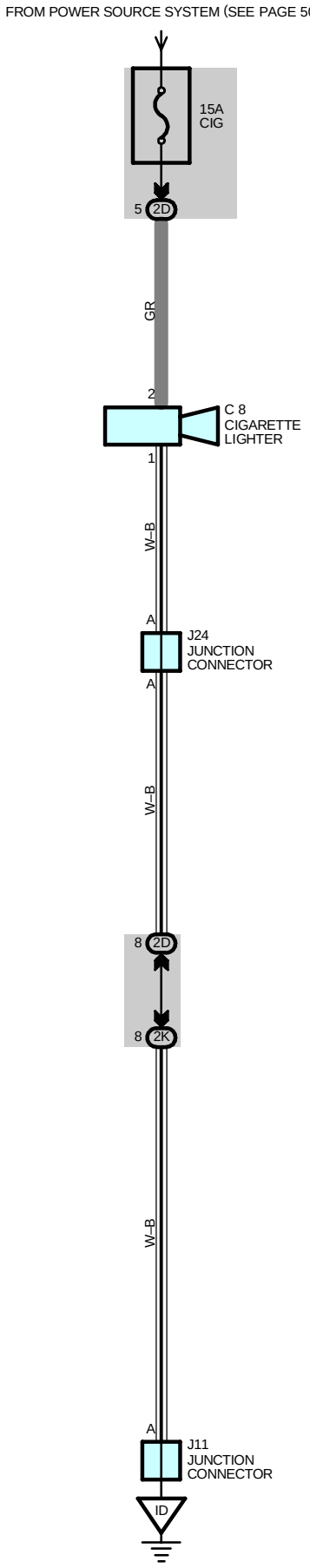

SERVICE HINTS

C8 CIGARETTE LIGHTER

2–GROUND : Approx. **12** volts with the ignition SW at **ACC** or **ON** position

1–GROUND : Always continuity

: PARTS LOCATION

Code	See Page	Code	See Page	Code	See Page
C8	36	J11	37	J24	37

: JUNCTION BLOCK AND WIRE HARNESS CONNECTOR

Code	See Page	Junction Block and Wire Harness (Connector Location)
2D	30	Instrument Panel Wire and Instrument Panel J/B (Cowl Side Panel LH)
2K	31	Cowl Wire and Instrument Panel J/B (Cowl Side Panel LH)

: GROUND POINTS

Code	See Page	Ground Points Location
ID	42	Cowl Side Panel LH

HORN

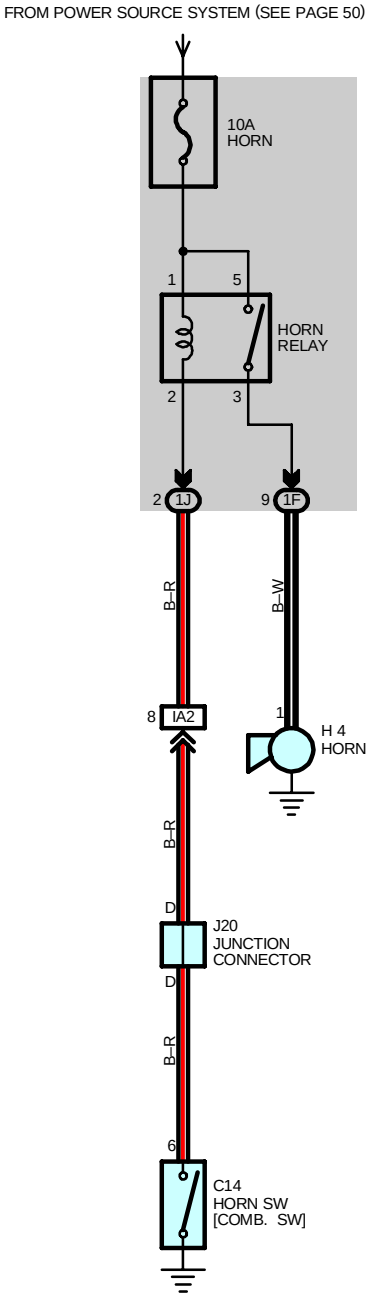
FROM POWER SOURCE SYSTEM (SEE PAGE 50)
10A
HORN
1
5
HORN
RELAY
2
3
2
1J
9
1F
B–R
B–W
8
IA2
1
H 4
HORN
B–R
D
J20
JUNCTION
CONNECTOR
D
B–R
6
C14
HORN SW
[COMB. SW]

SERVICE HINTS

HORN RELAY

5–3 : Closed with the horn SW on

: PARTS LOCATION

Code	See Page	Code	See Page	Code	See Page
C14	36	H4	34	J20	37

: JUNCTION BLOCK AND WIRE HARNESS CONNECTOR

Code	See Page	Junction Block and Wire Harness (Connector Location)
1F	27	Engine Room Main Wire and Engine Room J/B (Engine Compartment Left)
1J		

: CONNECTOR JOINING WIRE HARNESS AND WIRE HARNESS

Code	See Page	Joining Wire Harness and Wire Harness (Connector Location)
IA2	42	Engine Room Main Wire and Cowl Wire (Cowl Side Panel LH)

POWER WINDOW

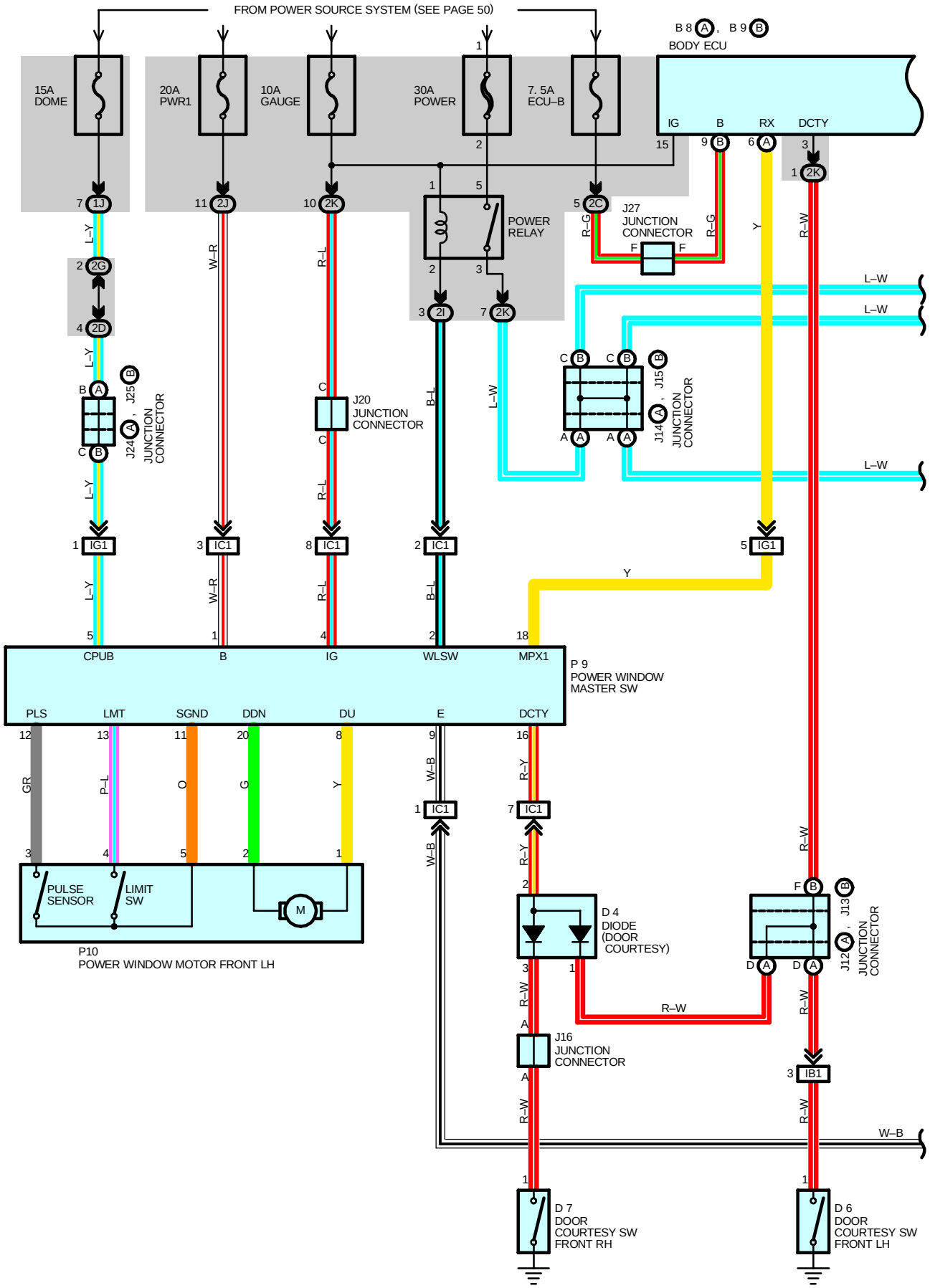

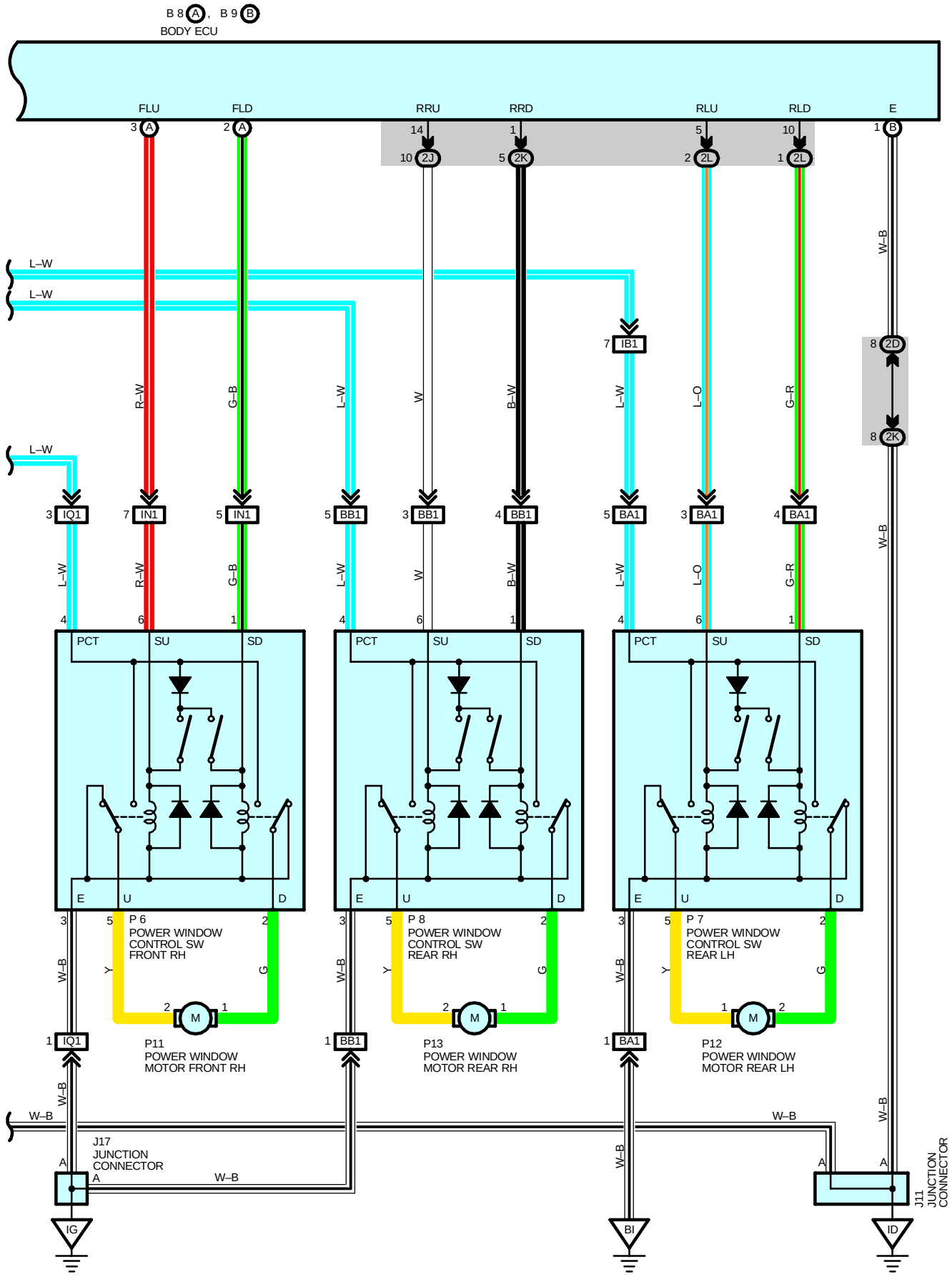
B 8 A , B 9 B
BODY ECU
FLU
FLD
RRU
RRD
RLU
RLD
E
L–W
R–W
G–B
W
B–W
L–O
G–R
W–B
IQ1
IN1
BB1
BA1
IB1
2D
2K
2J
2L
PCT
SU
SD
E
U
D
P 6
POWER WINDOW
CONTROL SW
FRONT RH
P 8
POWER WINDOW
CONTROL SW
REAR RH
P 7
POWER WINDOW
CONTROL SW
REAR LH
M
P11
POWER WINDOW
MOTOR FRONT RH
P13
POWER WINDOW
MOTOR REAR RH
P12
POWER WINDOW
MOTOR REAR LH
J17
JUNCTION
CONNECTOR
A
J11
JUNCTION
CONNECTOR
IG
BI
ID

POWER WINDOW

SYSTEM OUTLINE

Communication between power window master SW and body ECU is controlled and body ECU recognizes the conditions of each SW to control the operation of windows.

1. MANUAL UP OR DOWN OPERATION (DRIVER'S WINDOW, PASSENGER'S WINDOW)

During you are pushing power window master SW (Driver side) halfway down, the motor operates and the window on the driver's side opens. During you are pulling power window master SW (Driver side) halfway up, the motor operates and the windows on the driver's side closes. The window on the passenger's side opens or closes by pushing down or pulling up power window master SW (Front passenger, rear passenger) or power window SW front RH, rear LH, RH.

2. AUTO UP OR DOWN OPERATION (DRIVER'S WINDOW)

When the power window master SW (Driver side) is fully pushed down, the motor operates and the window on the driver's side automatically opens. When the power window master SW (Driver side) is fully pulled up, the motor operates and the window on the driver's side automatically closes.

3. STOPPING AUTOMATIC WINDOW OPERATION

If you push the power window master SW (Driver side) halfway down during the window on the driver's side is raising automatically, the motor's operation stops. And if you pull the power window master SW (Driver side) halfway up during the window on the driver's side is lowering automatically, the motor's operation stops.

4. KEY OFF POWER WINDOW OPERATION

After the Ignition SW is turned off, the windows can be operated for about 43 seconds. However, the window operation stops when either front doors opens.

5. JAM PROTECTION FUNCTION (DRIVER'S WINDOW)

When any foreign object gets caught during power window UP operation, the motor rotates in the opposite direction to open the window.

SERVICE HINTS

P9 POWER WINDOW MASTER SW

1–GROUND : Always approx. **12** volts
4–GROUND : Approx. **12** volts with the ignition SW at **ON** position
9–GROUND : Always continuity

B8 (A), B9 (B) BODY ECU

15–GROUND : Approx. **12** volts with the ignition SW at **ON** position
(B)9–GROUND : Always approx. 12 volts

: PARTS LOCATION

Code	See Page	Code	See Page	Code	See Page
B8 A	36	J15 B	37	P7	39
B9 B	36	J16	37	P8	39
D4	36	J17	37	P9	39
D6	38	J20	37	P10	39
D7	38	J24 A	37	P11	39
J12 A	37	J25 B	37	P12	39
J13 B	37	J27	37	P13	39
J14 A	37	P6	39		

: JUNCTION BLOCK AND WIRE HARNESS CONNECTOR

Code	See Page	Junction Block and Wire Harness (Connector Location)
1J	27	Engine Room Main Wire and Engine Room J/B (Engine Compartment Left)
2C	30	Instrument Panel Wire and Instrument Panel J/B (Cowl Side Panel LH)
2D		
2G	31	Engine Room Main Wire and Instrument Panel J/B (Cowl Side Panel LH)
2I	31	Cowl Wire and Instrument Panel J/B (Cowl Side Panel LH)
2J		
2K		
2L	31	Floor Wire and Instrument Panel J/B (Cowl Side Panel LH)

: CONNECTOR JOINING WIRE HARNESS AND WIRE HARNESS

Code	See Page	Joining Wire Harness and Wire Harness (Connector Location)
IB1	42	Floor Wire and Cowl Wire (Cowl Side Panel LH)
IC1	42	Front Door LH Wire and Cowl Wire (Left Kick Panel)
IG1	42	Front Door LH Wire and Instrument Panel Wire (Left Kick Panel)
IN1	44	Front Door RH Wire and Instrument Panel Wire (Right Kick Panel)
IQ1	44	Front Door RH Wire and Cowl Wire (Right Kick Panel)
BA1	46	Rear Door No.2 Wire and Floor Wire (Center Pillar LH)
BB1	46	Rear Door No.1 Wire and Cowl Wire (Center Pillar RH)

: GROUND POINTS

Code	See Page	Ground Points Location
IG	42	Cowl Side Panel RH
BI	46	Left Side of Rear Pillar

REMOTE CONTROL MIRROR

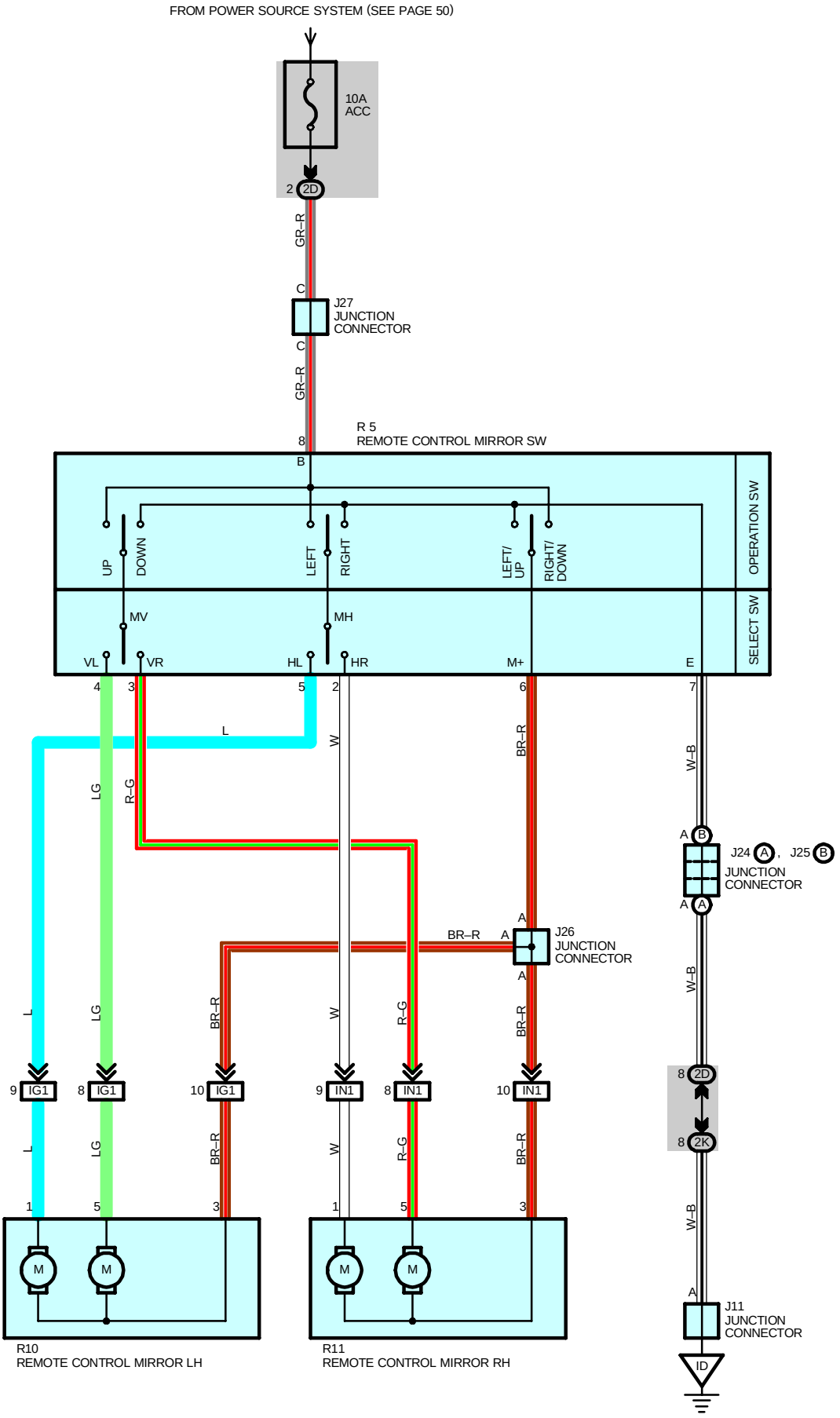

SERVICE HINTS

R5 REMOTE CONTROL MIRROR SW

8–GROUND : Approx. **12** volts with the ignition SW at **ACC** or **ON** position

6–7 : Continuity with the operation SW at **UP** or **LEFT** position

8–6 : Continuity with the operation SW at **DOWN** or **RIGHT** position

: PARTS LOCATION

Code		See Page	Code	See Page	Code	See Page
J11		37	J26	37	R10	39
J24	A	37	J27	37	R11	39
J25	B	37	R5	37		

: JUNCTION BLOCK AND WIRE HARNESS CONNECTOR

Code	See Page	Junction Block and Wire Harness (Connector Location)
2D	30	Instrument Panel Wire and Instrument Panel J/B (Cowl Side Panel LH)
2K	31	Cowl Wire and Instrument Panel J/B (Cowl Side Panel LH)

: CONNECTOR JOINING WIRE HARNESS AND WIRE HARNESS

Code	See Page	Joining Wire Harness and Wire Harness (Connector Location)
IG1	42	Front Door LH Wire and Instrument Panel Wire (Left Kick Panel)
IN1	44	Front Door RH Wire and Instrument Panel Wire (Right Kick Panel)

: GROUND POINTS

Code	See Page	Ground Points Location
ID	42	Cowl Side Panel LH

SHIFT LOCK

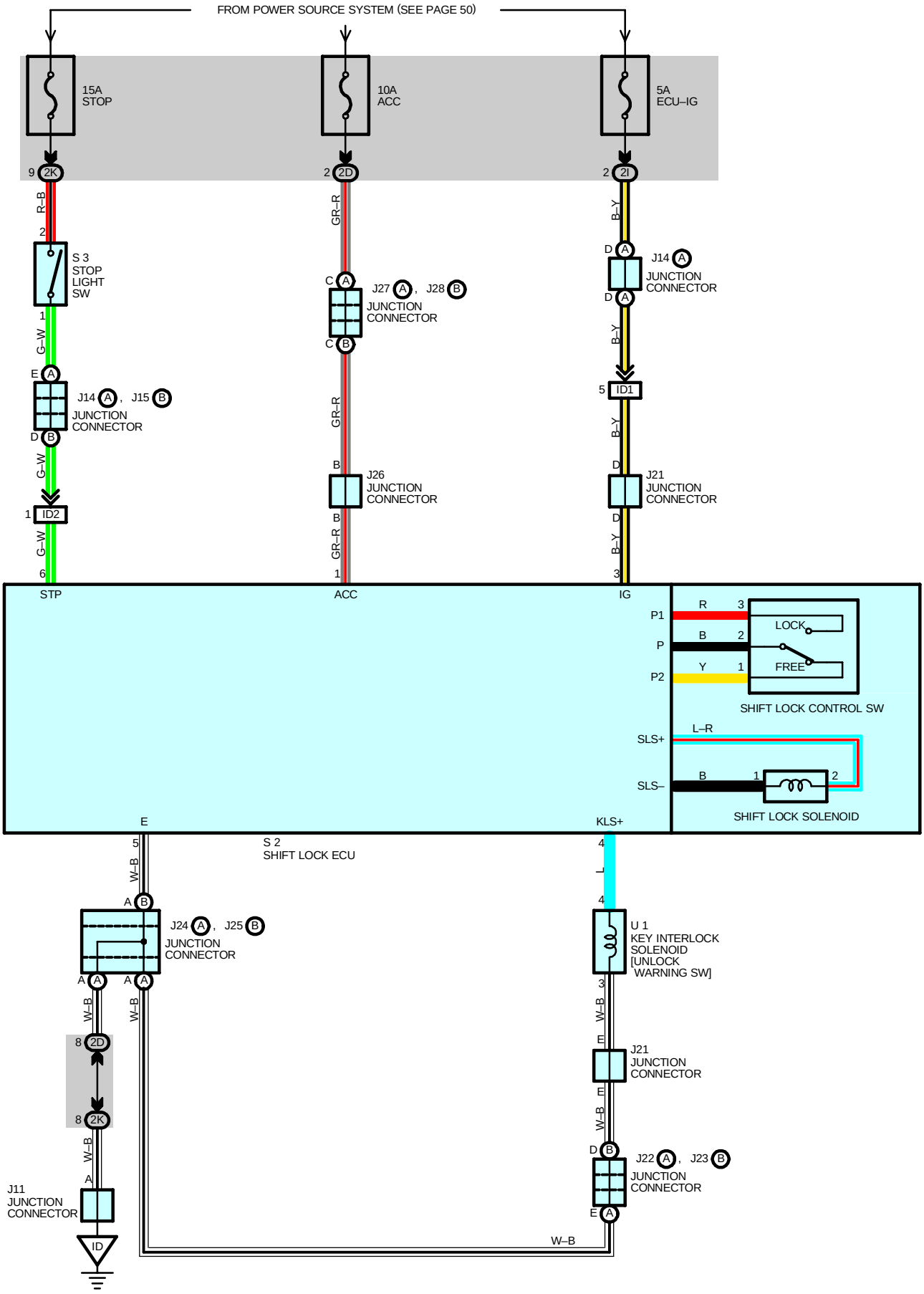
FROM POWER SOURCE SYSTEM (SEE PAGE 50)
15A
STOP
10A
ACC
5A
ECU–IG
9 2K
2 2D
2 2I
R–B
GR–R
B–Y
S 3
STOP
LIGHT
SW
J27 A , J28 B
JUNCTION
CONNECTOR
J14 A
J14 A , J15 B
G–W
B–Y
ID1
ID2
J26
J21
STP
ACC
IG
P1
P
P2
R
B
Y
LOCK
FREE
SHIFT LOCK CONTROL SW
SLS+
SLS–
L–R
SHIFT LOCK SOLENOID
E
KLS+
S 2
SHIFT LOCK ECU
W–B
L
J24 A , J25 B
U 1
KEY INTERLOCK
SOLENOID
[UNLOCK
WARNING SW]
8 2D
8 2K
J11
J22 A , J23 B
ID
W–B

SYSTEM OUTLINE

When the ignition SW is turned to ACC position the current from the ACC fuse flows to TERMINAL 1 of the shift lock ECU, in the ON position, the current from the ECU–IG fuse flows to TERMINAL 3 of the ECU.

1. SHIFT LOCK MECHANISM

With the ignition SW on, when a signal that the brake pedal is depressed (Stop light SW on) and a signal that the shift lever is put in P position (Continuity between P1 and P of the shift lock control SW) is input to the ECU, the ECU operates and current flows from TERMINAL 3 of the ECU to TERMINAL SLS+ of the shift lock solenoid to solenoid to TERMINAL SLS– to TERMINAL 5 of the ECU to GROUND. This causes the shift lock solenoid to turn on (Plate stopper disengages) and the shift lever can shift into position other than the P.

2. KEY INTERLOCK MECHANISM

With the ignition SW ON or ACC position, when the shift lever is put in P position (No continuity between P2 and P of shift lock control SW), the current flowing from TERMINAL 4 of the ECU to the key interlock solenoid is cut off. This causes the key interlock solenoid to turn off (Lock lever disengages from LOCK position) and the ignition key can be turned from ACC to LOCK position.

SERVICE HINTS

S2 SHIFT LOCK ECU

1–GROUND : Approx. **12** volts with the ignition SW at **ACC** or **ON** position
3–GROUND : Approx. **12** volts with the ignition SW at **ON** position
5–GROUND : Always continuity
6–GROUND : Approx. **12** volts with the brake pedal depressed

S3 STOP LIGHT SW

2–1 : Closed with the brake pedal depressed

: PARTS LOCATION

Code	See Page	Code	See Page	Code	See Page
J11	37	J23 B	37	J28 B	37
J14 A	37	J24 A	37	S2	37
J15 B	37	J25 B	37	S3	37
J21	37	J26	37	U1	37
J22 A	37	J27 A	37		

: JUNCTION BLOCK AND WIRE HARNESS CONNECTOR

Code	See Page	Junction Block and Wire Harness (Connector Location)
2D	30	Instrument Panel Wire and Instrument Panel J/B (Cowl Side Panel LH)
2I	31	Cowl Wire and Instrument Panel J/B (Cowl Side Panel LH)
2K		

: CONNECTOR JOINING WIRE HARNESS AND WIRE HARNESS

Code	See Page	Joining Wire Harness and Wire Harness (Connector Location)
ID1	42	Instrument Panel Wire and Cowl Wire (Left Kick Panel)
ID2		

: GROUND POINTS

Code	See Page	Ground Points Location
ID	42	Cowl Side Panel LH

DOOR LOCK CONTROL

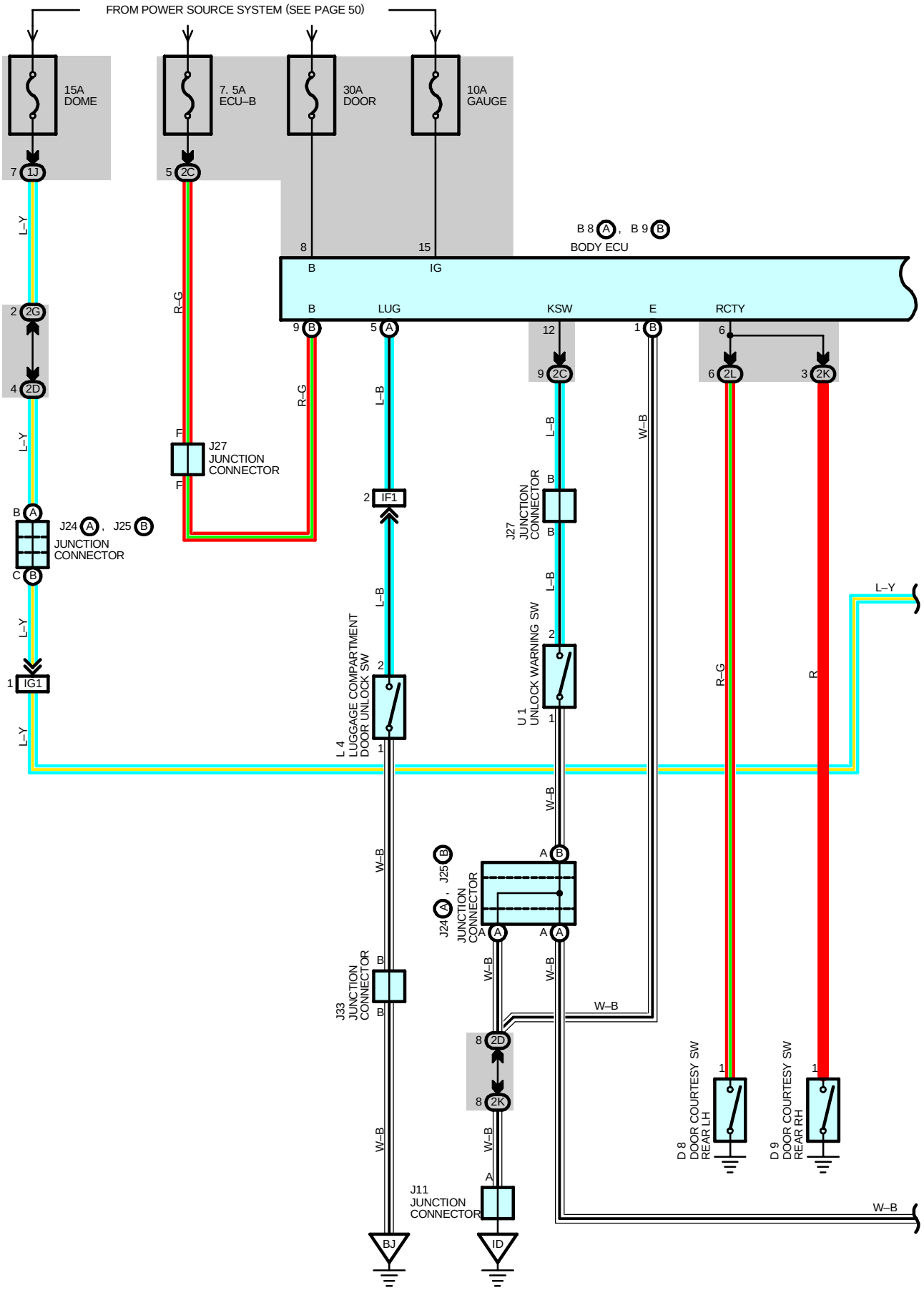

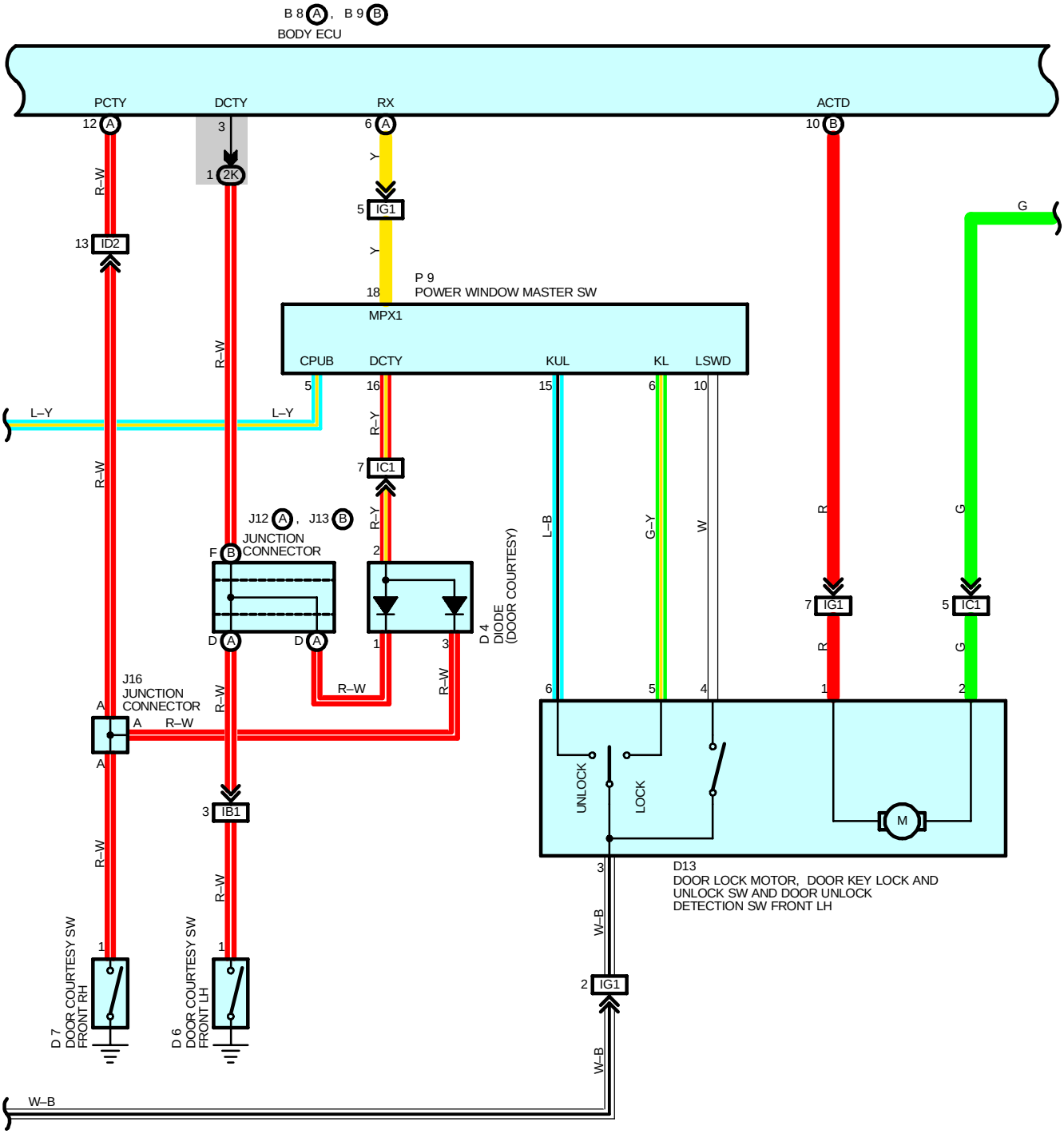
B 8 A , B 9 B
BODY ECU
PCTY
DCTY
RX
ACTD
12 A
3
1 2K
6 A
10 B
R–W
Y
5 IG1
G
13 ID2
18
P 9
POWER WINDOW MASTER SW
MPX1
CPUB
DCTY
KUL
KL
LSWD
5
16
15
6
10
L–Y
L–Y
R–W
R–Y
7 IC1
J12 A , J13 B
JUNCTION
CONNECTOR
F B
2
D A
D A
1
3
D 4
DIODE
(DOOR COURTESY)
L–B
G–Y
W
R
G
7 IG1
5 IC1
J16
JUNCTION
CONNECTOR
A
A
R–W
6
5
4
1
2
UNLOCK
LOCK
M
3 IB1
D13
DOOR LOCK MOTOR, DOOR KEY LOCK AND
UNLOCK SW AND DOOR UNLOCK
DETECTION SW FRONT LH
3
W–B
2 IG1
D 7
DOOR COURTESY SW
FRONT RH
D 6
DOOR COURTESY SW
FRONT LH
W–B

DOOR LOCK CONTROL

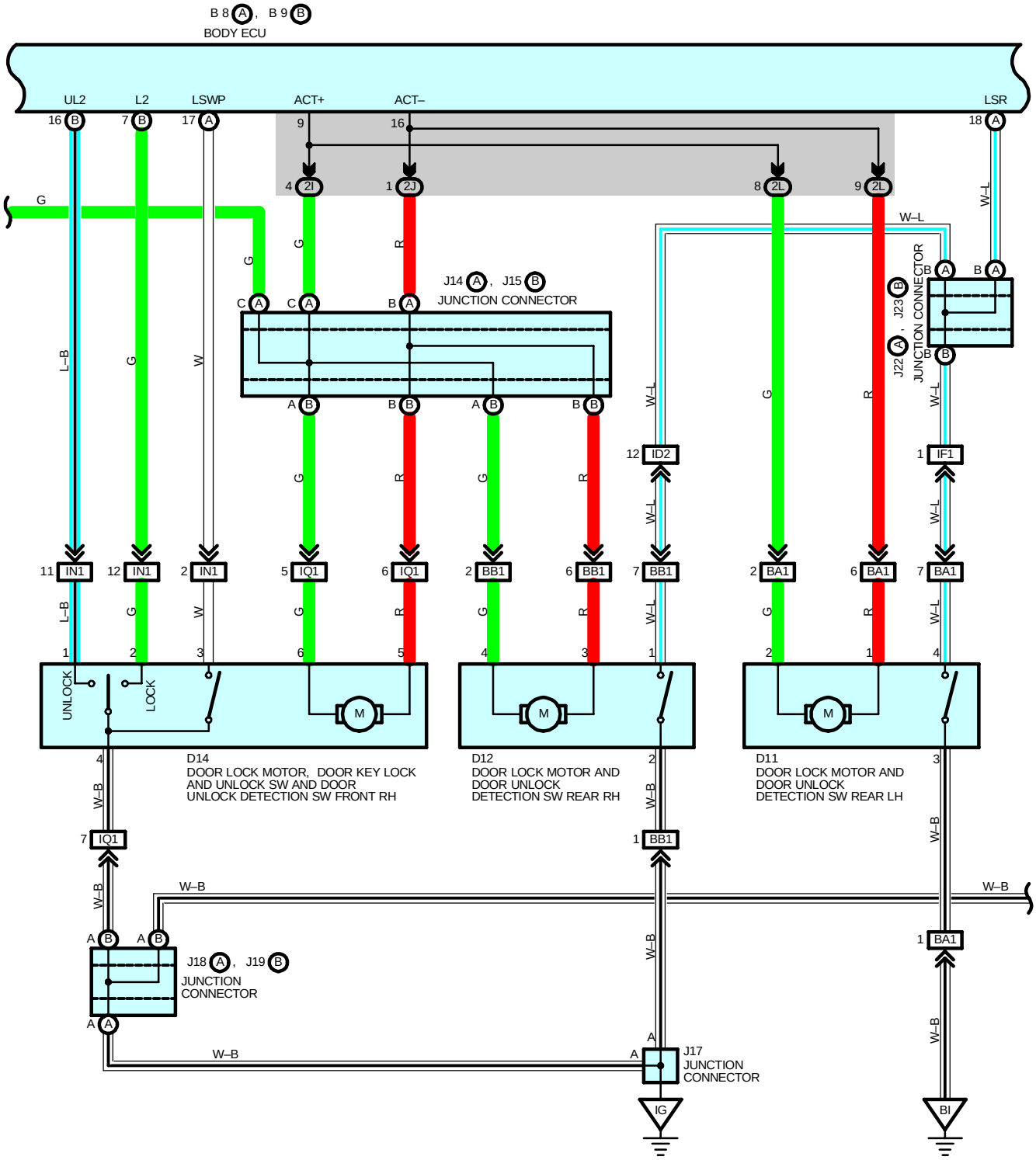

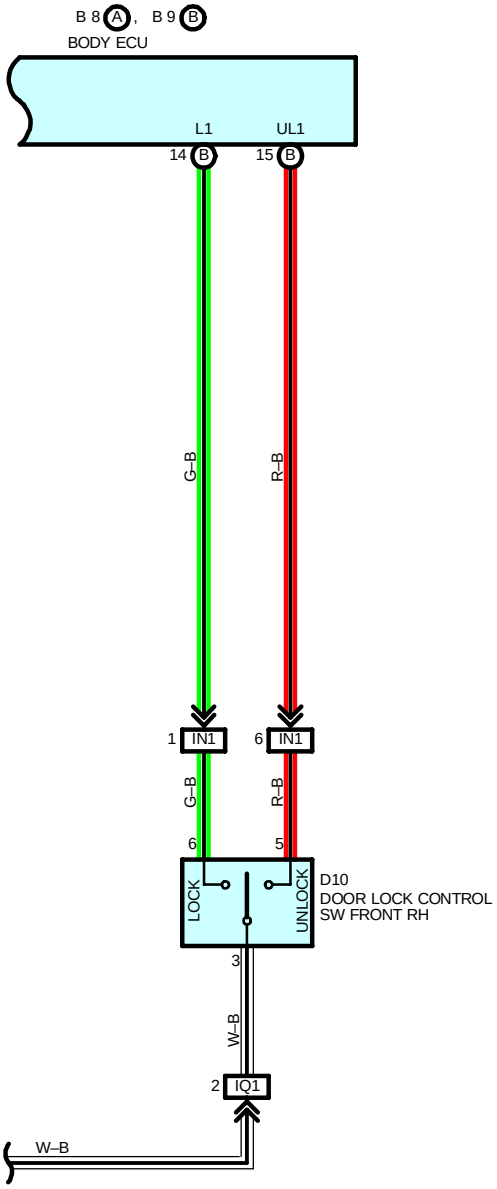
B 8 A , B 9 B
BODY ECU
L1
UL1
14 B
15 B
G–B
R–B
1 IN1
6 IN1
G–B
R–B
6
5
LOCK
UNLOCK
D10
DOOR LOCK CONTROL
SW FRONT RH
3
W–B
2 IQ1
W–B

DOOR LOCK CONTROL

SYSTEM OUTLINE

The current is always sent from DOOR fuse to TERMINAL B of body ECU. When ignition SW is turned on, the current is sent from GAUGE fuse to TERMINAL IG of the body ECU.

1. MANUAL LOCK OPERATION

When the door lock control SW (Power window master SW) is turned to LOCK position, the lock signal from TERMINAL MPX1 of power window master SW is input to TERMINAL RX of body ECU to operate ECU. The current is sent from TERMINAL ACT+ of ECU to each motor and the motor locks the doors by the current sent from TERMINAL ACT– of ECU to GROUND.

2. MANUAL UNLOCK OPERATION

When the door lock control SW (Power window master SW) is turned to UNLOCK position, the unlock signal from TERMINAL MPX1 of power window master SW is input to TERMINAL RX of body ECU to operate ECU. The current is sent from TERMINAL ACT– of ECU to each motor and the motor unlocks the doors by the current sent from TERMINAL ACT+ of ECU to GROUND.

3. DOOR KEY LOCK AND UNLOCK OPERATION

* Lock operation from the driver's side door
  When the driver's side door is locked using the ignition key, all the doors are locked.
* Unlock operation from the driver's side door
  When the driver's side door is unlocked once using the ignition key, only the driver's side door is unlocked. If this operation is repeated within 3 seconds, all the other doors are unlocked.
* Lock operation from the front passenger's side door
  When the front passenger's side door is locked using the ignition key, all the doors are locked.
* Unlock operation from the front passenger's side door
  When the front passenger's side door is unlocked using the ignition key, all the doors are unlocked

SERVICE HINTS

B8 (A), B9 (B) BODY ECU

15–GROUND : Approx. **12** volts with the ignition SW at **ON** position
8–GROUND : Always approx. **12** volts
(B) 1–GROUND : Always continuity

D6, D7, D8, D9 DOOR COURTESY SW FRONT LH, RH, REAR LH, RH

1–GROUND : Closed with each of the door open

U1 UNLOCK WARNING SW

1–2 : Closed with the ignition key in the cylinder

○ : PARTS LOCATION

Code	See Page	Code	See Page	Code	See Page
B8 A	36	D13	38	J19 B	37
B9 B	36	D14	38	J22 A	37
D4	36	J11	37	J23 B	37
D6	38	J12 A	37	J24 A	37
D7	38	J13 B	37	J25 B	37
D8	38	J14 A	37	J27	37
D9	38	J15 B	37	J33	38
D10	38	J16	37	L4	38
D11	38	J17	37	P9	39
D12	38	J18 A	37	U1	37

: JUNCTION BLOCK AND WIRE HARNESS CONNECTOR

Code	See Page	Junction Block and Wire Harness (Connector Location)
1J	27	Engine Room Main Wire and Engine Room J/B (Engine Compartment Left)
2C	30	Instrument Panel Wire and Instrument Panel J/B (Cowl Side Panel LH)
2D		
2G	31	Engine Room Main Wire and Instrument Panel J/B (Cowl Side Panel LH)
2I	31	Cowl Wire and Instrument Panel J/B (Cowl Side Panel LH)
2J		
2K		
2L	31	Floor Wire and Instrument Panel J/B (Cowl Side Panel LH)

: CONNECTOR JOINING WIRE HARNESS AND WIRE HARNESS

Code	See Page	Joining Wire Harness and Wire Harness (Connector Location)
IB1	42	Floor Wire and Cowl Wire (Cowl Side Panel LH)
IC1	42	Front Door LH Wire and Cowl Wire (Left Kick Panel)
ID2	42	Instrument Panel Wire and Cowl Wire (Left Kick Panel)
IF1	42	Instrument Panel Wire and Floor Wire (Left Kick Panel)
IG1	42	Front Door LH Wire and Instrument Panel Wire (Left Kick Panel)
IN1	44	Front Door RH Wire and Instrument Panel Wire (Right Kick Panel)
IQ1	44	Front Door RH Wire and Cowl Wire (Right Kick Panel)
BA1	46	Rear Door No.2 Wire and Floor Wire (Center Pillar LH)
BB1	46	Rear Door No.1 Wire and Cowl Wire (Center Pillar RH)

: GROUND POINTS

Code	See Page	Ground Points Location
ID	42	Cowl Side Panel LH
IG	42	Cowl Side Panel RH
BI	46	Left Side of Rear Pillar
BJ	46	Right Side of Rear Pillar

WIRELESS DOOR LOCK CONTROL

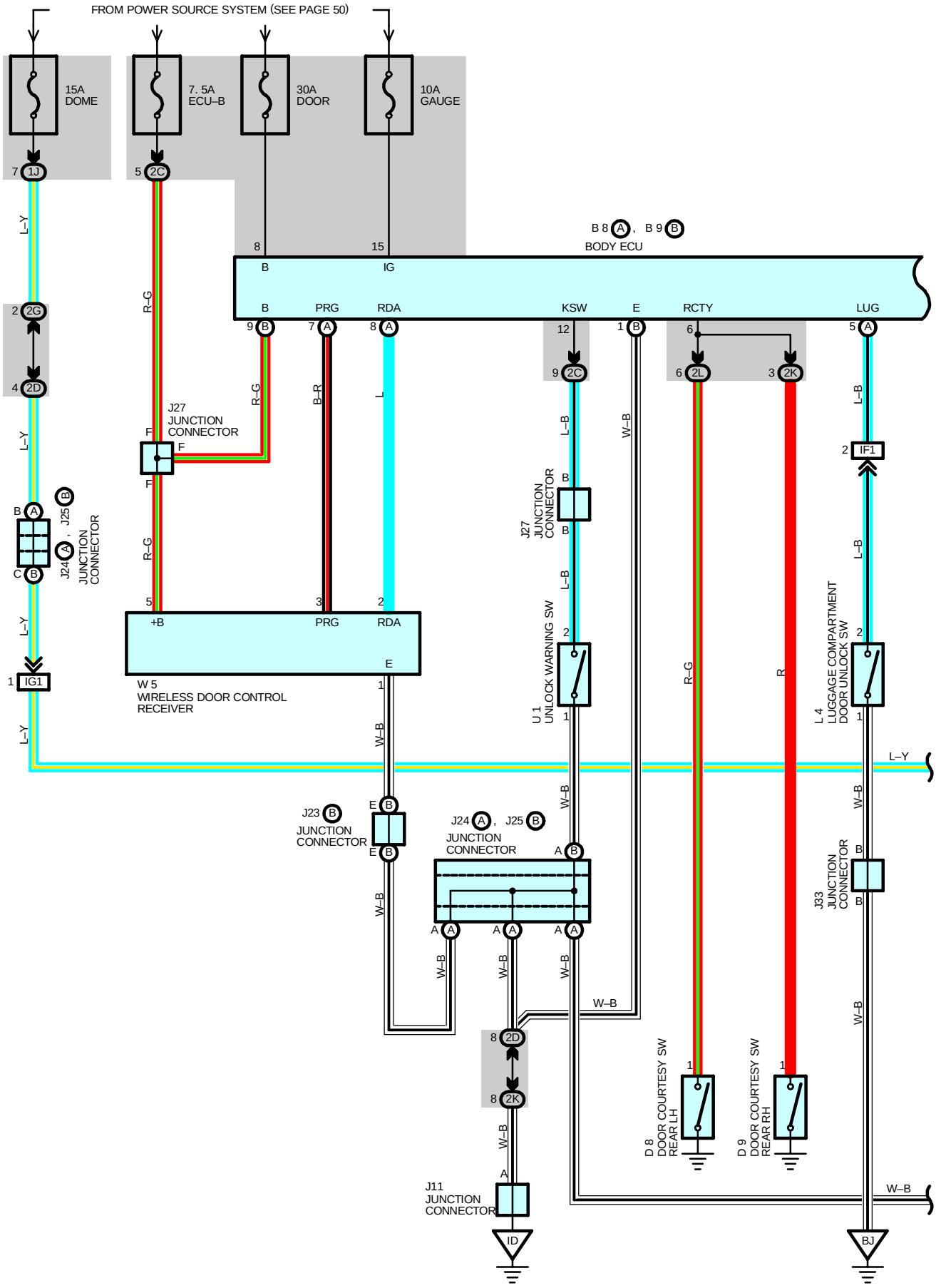

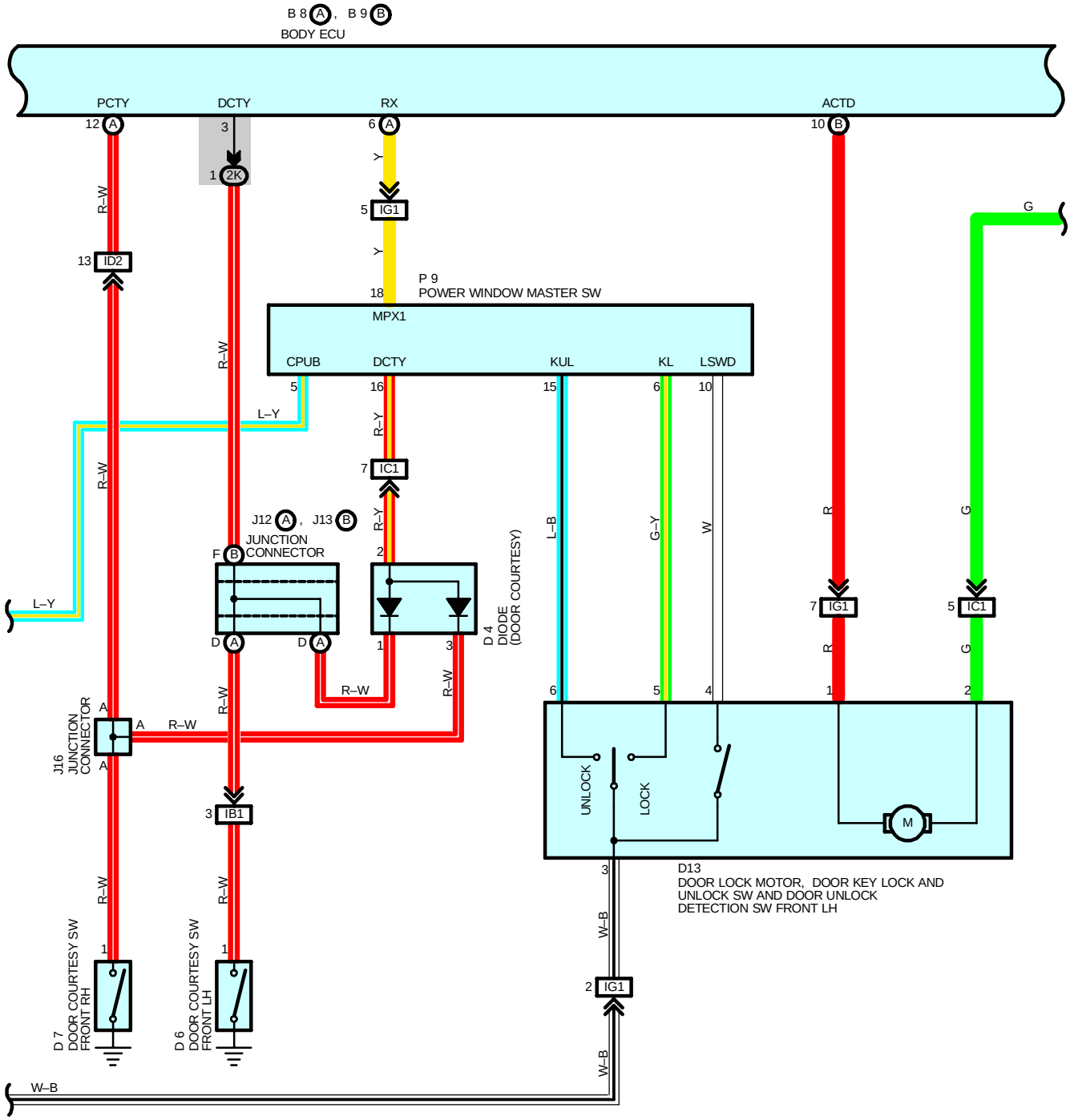
B 8 A , B 9 B
BODY ECU
PCTY
DCTY
RX
ACTD
12 A
3
1 2K
6 A
10 B
R–W
Y
5 IG1
G
13 ID2
P 9
POWER WINDOW MASTER SW
18
MPX1
CPUB
DCTY
KUL
KL
LSWD
5
16
15
6
10
L–Y
R–Y
7 IC1
J12 A , J13 B
JUNCTION CONNECTOR
F B
2
L–B
G–Y
W
R
G
7 IG1
5 IC1
D A
D A
1
3
D 4
DIODE
(DOOR COURTESY)
6
5
4
1
2
J16
JUNCTION
CONNECTOR
A
A
R–W
3 IB1
UNLOCK
LOCK
M
D13
DOOR LOCK MOTOR, DOOR KEY LOCK AND
UNLOCK SW AND DOOR UNLOCK
DETECTION SW FRONT LH
3
W–B
2 IG1
D 7
DOOR COURTESY SW
FRONT RH
D 6
DOOR COURTESY SW
FRONT LH
W–B

WIRELESS DOOR LOCK CONTROL

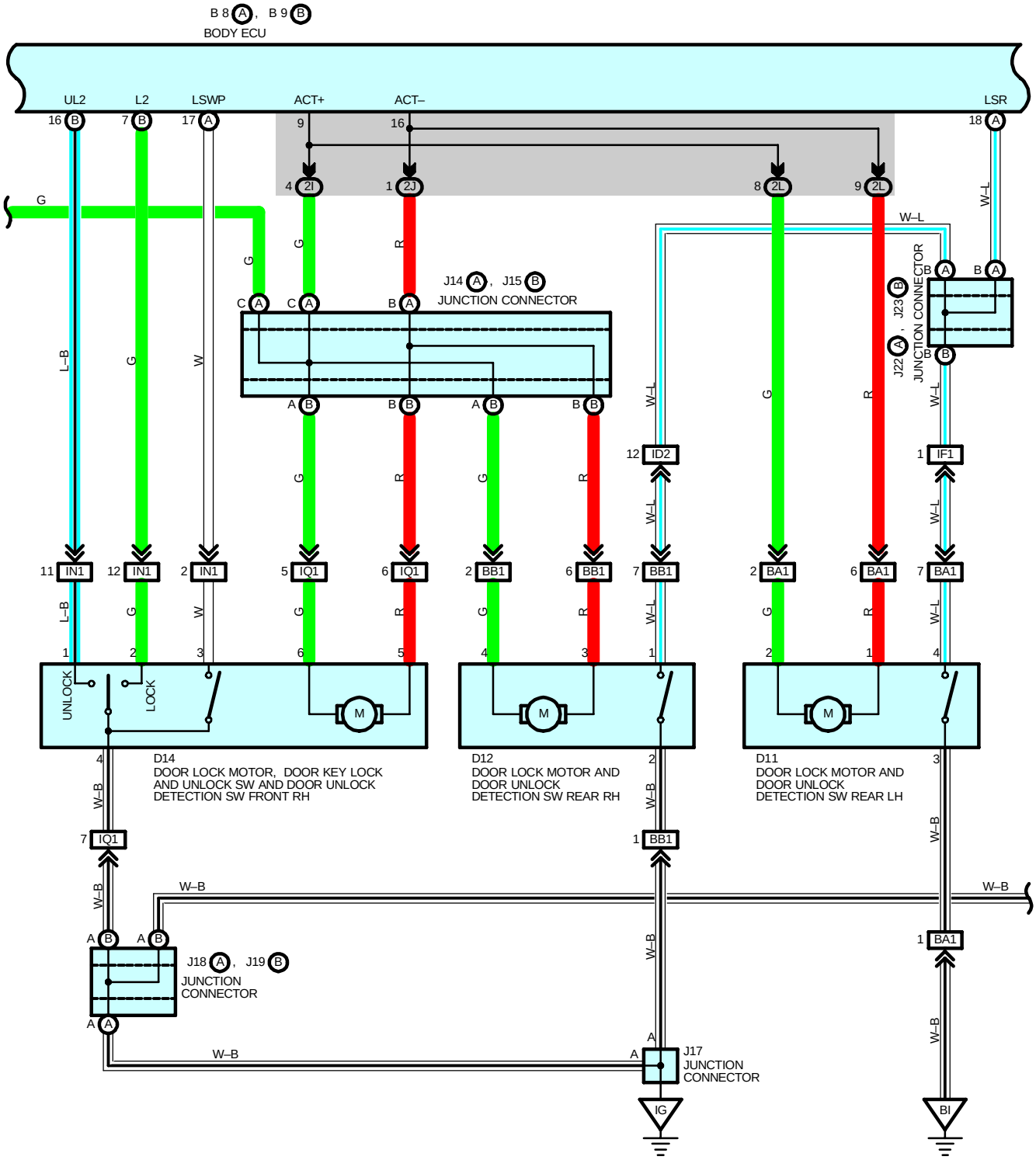

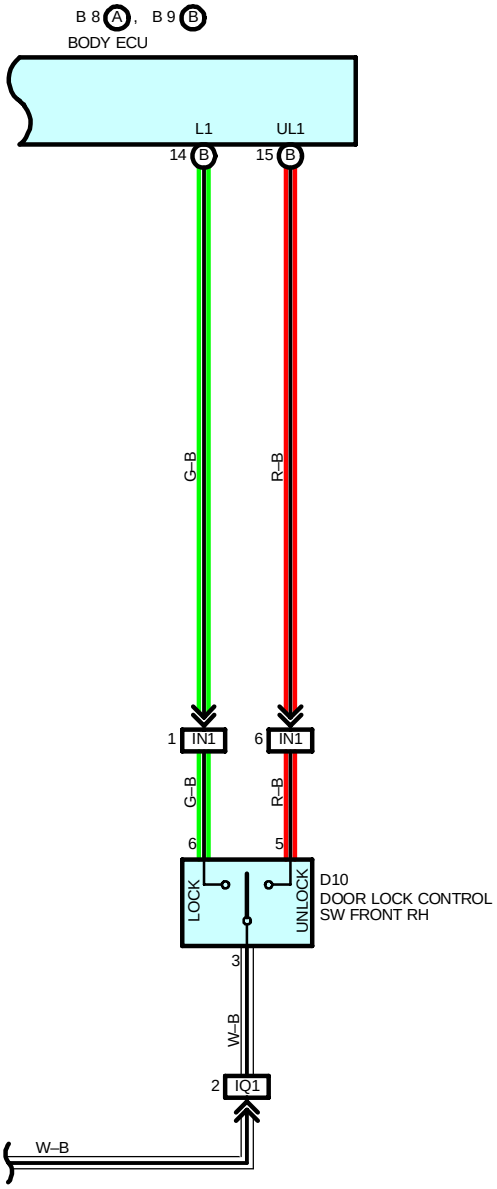
B 8 A , B 9 B
BODY ECU
L1
UL1
14 B
15 B
G–B
R–B
1 IN1
6 IN1
G–B
R–B
6
5
LOCK
UNLOCK
D10
DOOR LOCK CONTROL
SW FRONT RH
3
W–B
2 IQ1
W–B

WIRELESS DOOR LOCK CONTROL

SYSTEM OUTLINE

The current is always sent from DOOR fuse to TERMINAL B of body ECU. At the same time, the current is always sent from DOME fuse to TERMINAL CPUB of power window master SW, and from ECU–B fuse to wireless door lock receiver. When ignition SW is turned on, the current is sent from GAUGE fuse to TERMINAL IG of body ECU.

1. WIRELESS DOOR LOCK OR UNLOCK NORMAL OPERATION

∗ Lock operation
When the LOCK SW of the transmitter is pushed, all the doors are locked.
∗ Unlock operation
When the UNLOCK SW of the transmitter is pushed, all the doors are unlocked.

2. AUTOMATIC LOCK OPERATION

After all the doors are unlocked by pushing the UNLOCK SW of the transmitter, unless each of the doors is opened or the ignition key is inserted, all the doors are locked again.

3. VISUAL CONFIRMATION OF LOCK OR UNLOCK FUNCTION

When doors are locked by using the transmitter, the taillight and parking lights blink once. When doors are unlocked by using the transmitter, the taillights and parking lights blink twice. If UNLOCK SW of the transmitter is pushed while all the doors are locked, doors are unlocked and the room lights are turned on simultaneously.

4. WIRELESS CONTROL STOP FUNCTION

If the following situations occur, wireless door lock function does not operate.
∗ When each of the doors opens. (Door courtesy SW is on)
∗ When ignition key is inserted to ignition SW. (Unlock warning SW is on)
∗ When ignition SW is on.

5. REPEAT FUNCTION

If the doors are not locked after the lock signal is out put from transmitter by pushing LOCK SW, the lock signal is sent again to lock the doors.

6. PANIC MODE FUNCTION

When the panic SW of the transmitter is pushed, the horn comes on, and the headlight and taillight flashes.

SERVICE HINTS

B8 (A), B9 (B) BODY ECU

15–GROUND : Approx. **12** volts with the ignition SW at **ON** position
8–GROUND : Always approx. **12** volts
(B) 1–GROUND : Always continuity

W5 WIRELESS DOOR LOCK CONTROL RECEIVER

5–GROUND : Always approx. **12** volts
1–GROUND : Always continuity

U1 UNLOCK WARNING SW

2–1 : Closed with the ignition key in the cylinder

○ : PARTS LOCATION

Code	See Page	Code	See Page	Code	See Page
B8 A	36	D14	38	J23 B	37
B9 B	36	J11	37	J24 A	37
D4	36	J12 A	37	J25 B	37
D6	38	J13 B	37	J27	37
D7	38	J14 A	37	J33	38
D8	38	J15 B	37	L4	38
D9	38	J16	37	P9	39
D10	38	J17	37	U1	37
D11	38	J18 A	37	W5	37
D12	38	J19 B	37		
D13	38	J22 A	37		

: JUNCTION BLOCK AND WIRE HARNESS CONNECTOR

Code	See Page	Junction Block and Wire Harness (Connector Location)
1J	27	Engine Room Main Wire and Engine Room J/B (Engine Compartment Left)
2C	30	Instrument Panel Wire and Instrument Panel J/B (Cowl Side Panel LH)
2D		
2G	31	Engine Room Main Wire and Instrument Panel J/B (Cowl Side Panel LH)
2I	31	Cowl Wire and Instrument Panel J/B (Cowl Side Panel LH)
2J		
2K		
2L	31	Floor Wire and Instrument Panel J/B (Cowl Side Panel LH)

: CONNECTOR JOINING WIRE HARNESS AND WIRE HARNESS

Code	See Page	Joining Wire Harness and Wire Harness (Connector Location)
IB1	42	Floor Wire and Cowl Wire (Cowl Side Panel LH)
IC1	42	Front Door LH Wire and Cowl Wire (Left Kick Panel)
ID2	42	Instrument Panel Wire and Cowl Wire (Left Kick Panel)
IF1	42	Instrument Panel Wire and Floor Wire (Left Kick Panel)
IG1	42	Front Door LH Wire and Instrument Panel Wire (Left Kick Panel)
IN1	44	Front Door RH Wire and Instrument Panel Wire (Right Kick Panel)
IQ1	44	Front Door RH Wire and Cowl Wire (Right Kick Panel)
BA1	46	Rear Door No.2 Wire and Floor Wire (Center Pillar LH)
BB1	46	Rear Door No.1 Wire and Cowl Wire (Center Pillar RH)

: GROUND POINTS

Code	See Page	Ground Points Location
ID	42	Cowl Side Panel LH
IG	42	Cowl Side Panel RH
BI	46	Left Side of Rear Pillar
BJ	46	Right Side of Rear Pillar

THEFT DETERRENT

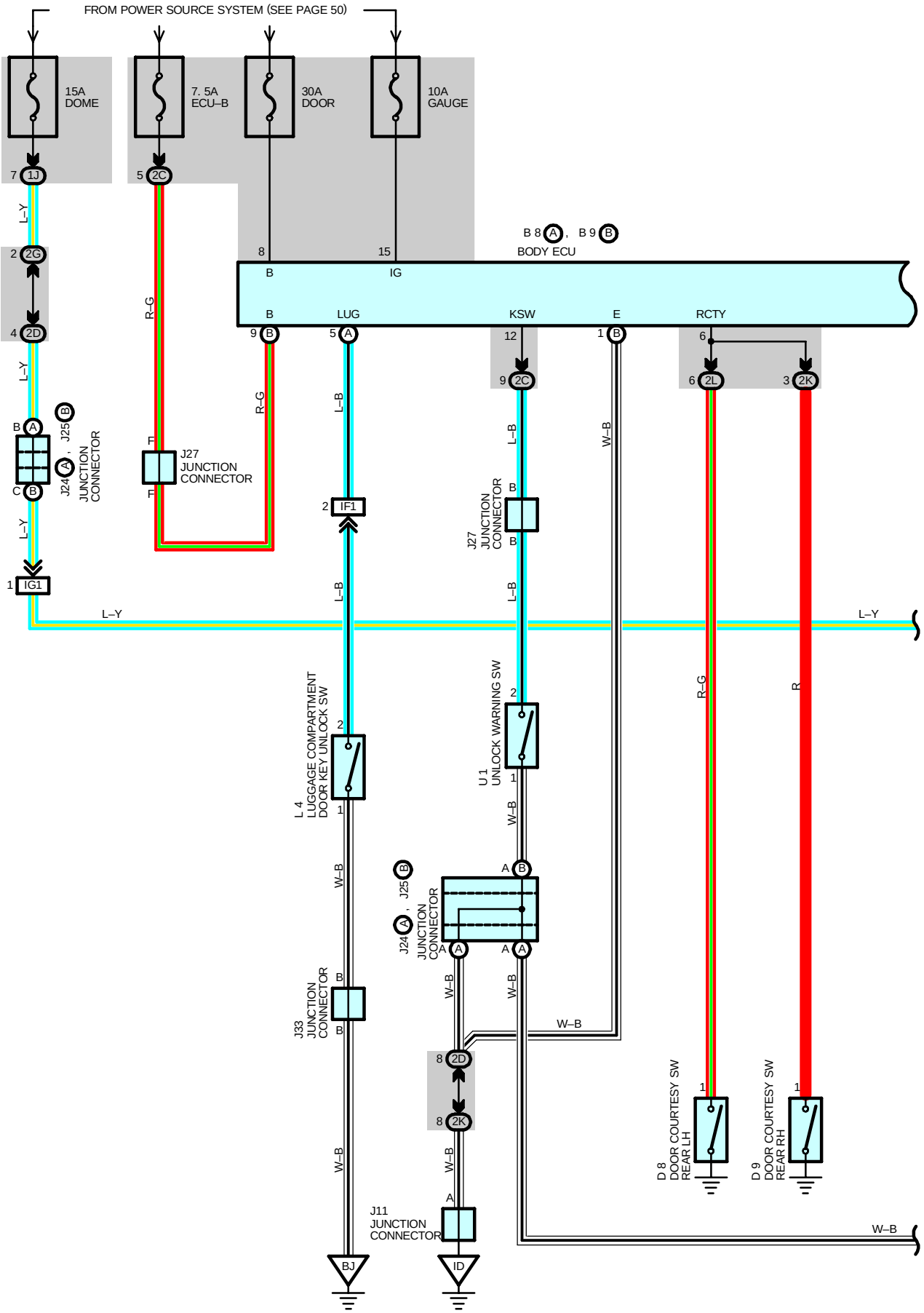

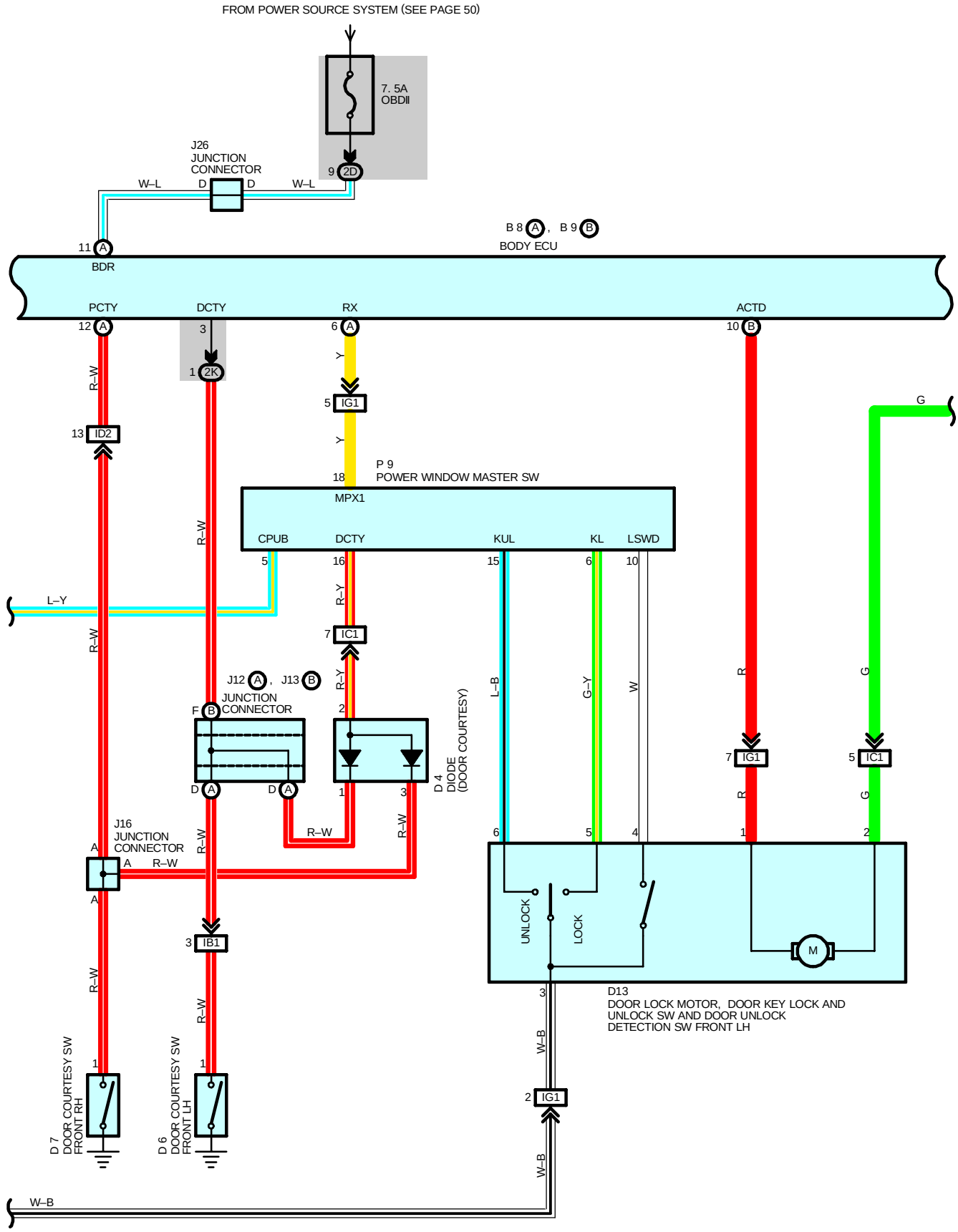
FROM POWER SOURCE SYSTEM (SEE PAGE 50)
7. 5A
OBDII
J26
JUNCTION
CONNECTOR
9 2D
W–L
D
D
W–L
11 A
BDR
B 8 A , B 9 B
BODY ECU
PCTY
DCTY
RX
ACTD
12 A
3
1 2K
6 A
10 B
R–W
Y
5 IG1
13 ID2
G
18
P 9
POWER WINDOW MASTER SW
MPX1
CPUB
DCTY
KUL
KL
LSWD
5
16
15
6
10
L–Y
R–W
R–Y
7 IC1
J12 A , J13 B
JUNCTION
CONNECTOR
F B
2
L–B
G–Y
W
R
G
D A
D A
1
3
D 4
DIODE
(DOOR COURTESY)
7 IG1
5 IC1
J16
JUNCTION
CONNECTOR
A
A
R–W
6
5
4
1
2
UNLOCK
LOCK
M
3 IB1
D13
DOOR LOCK MOTOR, DOOR KEY LOCK AND
UNLOCK SW AND DOOR UNLOCK
DETECTION SW FRONT LH
3
W–B
2 IG1
D 7
DOOR COURTESY SW
FRONT RH
D 6
DOOR COURTESY SW
FRONT LH
W–B

THEFT DETERRENT

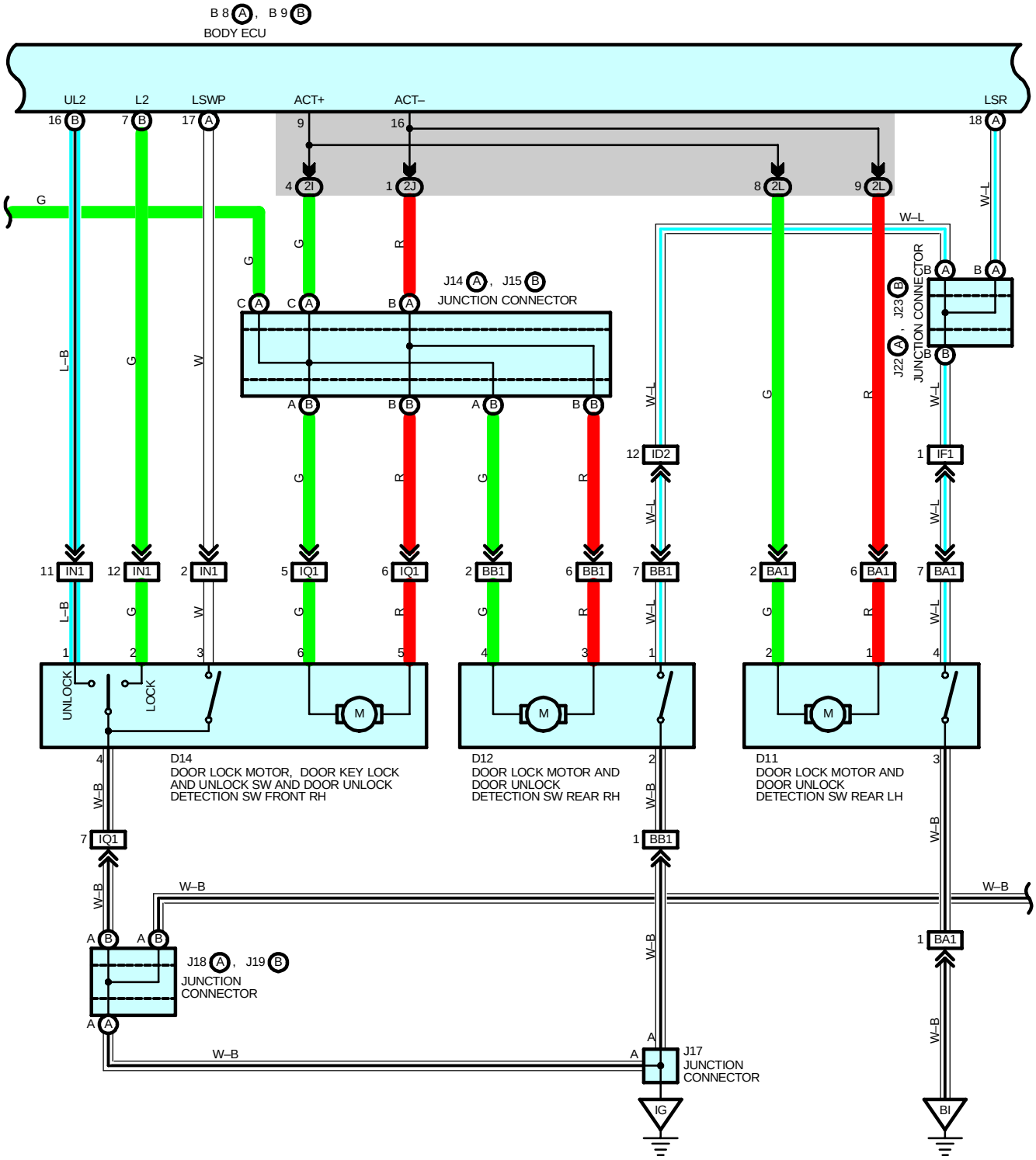

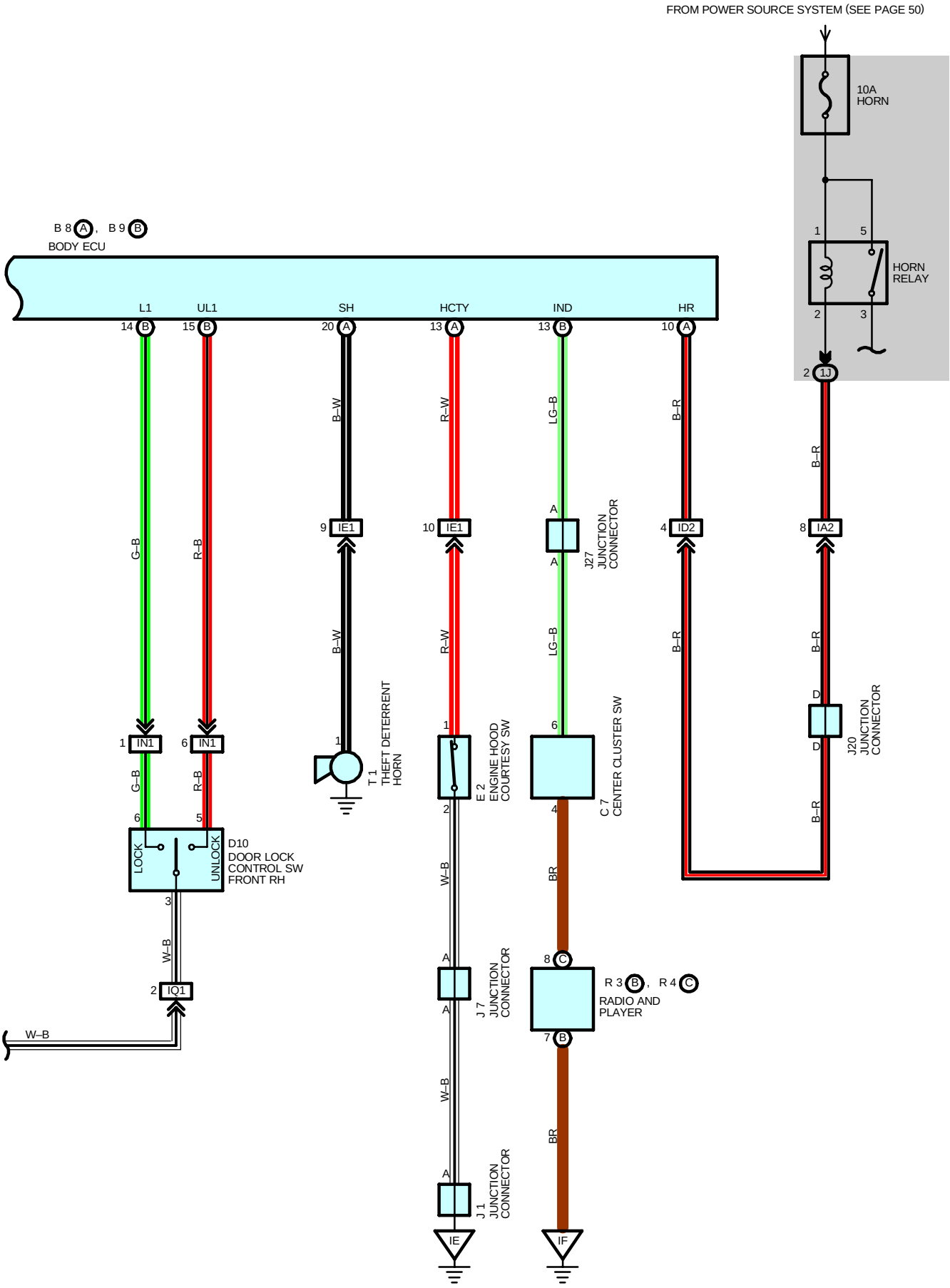
FROM POWER SOURCE SYSTEM (SEE PAGE 50)
10A
HORN
HORN
RELAY
B 8 A , B 9 B
BODY ECU
L1
UL1
SH
HCTY
IND
HR
14 B
15 B
20 A
13 A
13 B
10 A
2 1J
G–B
R–B
B–W
R–W
LG–B
B–R
9 IE1
10 IE1
A
J27
JUNCTION
CONNECTOR
4 ID2
8 IA2
1 IN1
6 IN1
1
T 1
THEFT DETERRENT
HORN
1
E 2
ENGINE HOOD
COURTESY SW
6
C 7
CENTER CLUSTER SW
D
J20
JUNCTION
CONNECTOR
6
5
LOCK
UNLOCK
D10
DOOR LOCK
CONTROL SW
FRONT RH
3
W–B
2 IQ1
W–B
2
4
BR
A
J 7
JUNCTION
CONNECTOR
8 C
R 3 B , R 4 C
RADIO AND
PLAYER
7 B
A
J 1
JUNCTION
CONNECTOR
IE
IF

THEFT DETERRENT

SERVICE HINTS

D13 DOOR KEY LOCK AND UNLOCK SW AND DOOR UNLOCK DETECTION SW FRONT LH

6–3 : Closed with door lock cylinder unlocked with key
5–3 : Closed with door lock cylinder locked with key

D14 DOOR KEY LOCK AND UNLOCK SW AND DOOR UNLOCK DETECTION SW FRONT RH

1–4 : Closed with door lock cylinder unlocked with key
2–4 : Closed with door lock cylinder locked with key

E2 ENGINE HOOD COURTESY SW

2–1 : Open with engine hood open

U1 UNLOCK WARNING SW

2–1 : Closed with ignition key in cylinder

L4 LUGGAGE COMPARTMENT DOOR KEY UNLOCK SW

2–1 : Closed with luggage compartment door lock cylinder unlock

B8 (A), B9 (B) BODY ECU

(A)17–GROUND : Continuity with front RH door unlocked
(B) 1–GROUND : Always continuity
(A) 5–GROUND : Continuity with luggage compartment door unlocked
(A)13–GROUND : Continuity with engine hood closed
(A) 5–GROUND : Continuity with luggage compartment door open
(A)12–GROUND : Continuity with front RH door open
(B) 9–GROUND : Always approx. **12** volts
8–GROUND : Always approx. **12** volts
15–GROUND : Approx. **12** volts with the ignition SW at **ON** position
6–GROUND : Continuity with rear LH, RH door open
3–GROUND : Continuity with front LH door open

: PARTS LOCATION

Code	See Page	Code	See Page	Code	See Page
B8 A	36	E2	34	J22 A	37
B9 B	36	J1	37	J23 B	37
C7	36	J7	37	J24 A	37
D4	36	J11	37	J25 B	37
D6	38	J12 A	37	J26	37
D7	38	J13 B	37	J27	37
D8	38	J14 A	37	J33	38
D9	38	J15 B	37	L4	38
D10	38	J16	37	P9	39
D11	38	J17	37	R3 B	37
D12	38	J18 A	37	R4 C	37
D13	38	J19 B	37	T1	35
D14	38	J20	37	U1	37

: JUNCTION BLOCK AND WIRE HARNESS CONNECTOR

Code	See Page	Junction Block and Wire Harness (Connector Location)
1J	27	Engine Room Main Wire and Engine Room J/B (Engine Compartment Left)
2C	30	Instrument Panel Wire and Instrument Panel J/B (Cowl Side Panel LH)
2D		
2G	31	Engine Room Main Wire and Instrument Panel J/B (Cowl Side Panel LH)
2I	31	Cowl Wire and Instrument Panel J/B (Cowl Side Panel LH)
2J		
2K		
2L	31	Floor Wire and Instrument Panel J/B (Cowl Side Panel LH)

: CONNECTOR JOINING WIRE HARNESS AND WIRE HARNESS

Code	See Page	Joining Wire Harness and Wire Harness (Connector Location)
IA2	42	Engine Room Main Wire and Cowl Wire (Cowl Side Panel LH)
IB1	42	Floor Wire and Cowl Wire (Cowl Side Panel LH)
IC1	42	Front Door LH Wire and Cowl Wire (Left Kick Panel)
ID2	42	Instrument Panel Wire and Cowl Wire (Left Kick Panel)
IE1	42	Instrument Panel Wire and Engine Room Main Wire (Left Kick Panel)
IF1	42	Instrument Panel Wire and Floor Wire (Left Kick Panel)
IG1	42	Front Door LH Wire and Instrument Panel Wire (Left Kick Panel)
IN1	44	Front Door RH Wire and Instrument Panel Wire (Right Kick Panel)
IQ1	44	Front Door RH Wire and Cowl Wire (Right Kick Panel)
BA1	46	Rear Door No.2 Wire and Floor Wire (Center Pillar LH)
BB1	46	Rear Door No.1 Wire and Cowl Wire (Center Pillar RH)

: GROUND POINTS

Code	See Page	Ground Points Location
ID	42	Cowl Side Panel LH
IE		
IF	42	Left Kick Panel
IG	42	Cowl Side Panel RH
BI	46	Left Side of Rear Pillar
BJ	46	Right Side of Rear Pillar

RADIO AND PLAYER

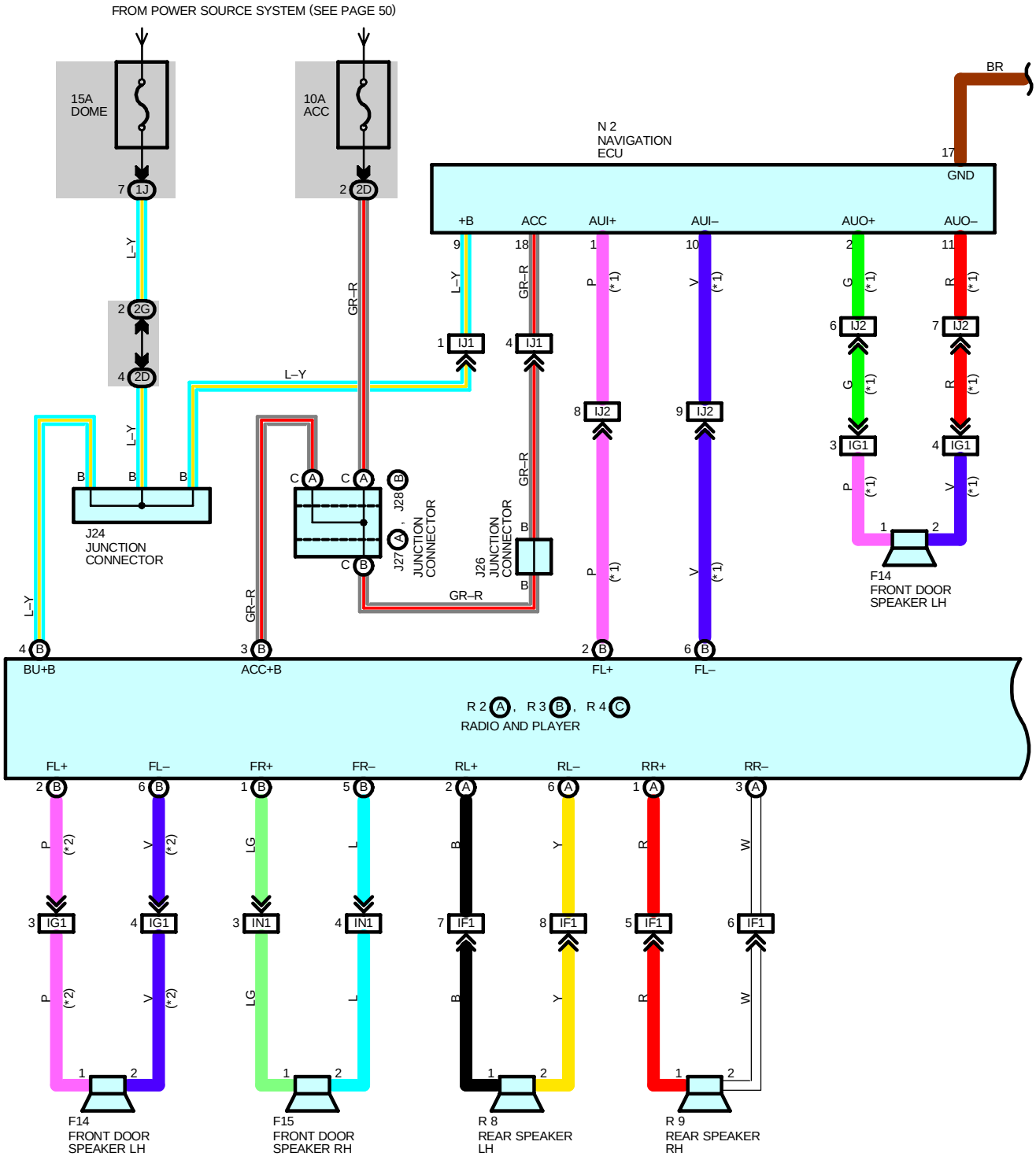

* 1 : W/ NAVIGATION SYSTEM
* 2 : W/O NAVIGATION SYSTEM

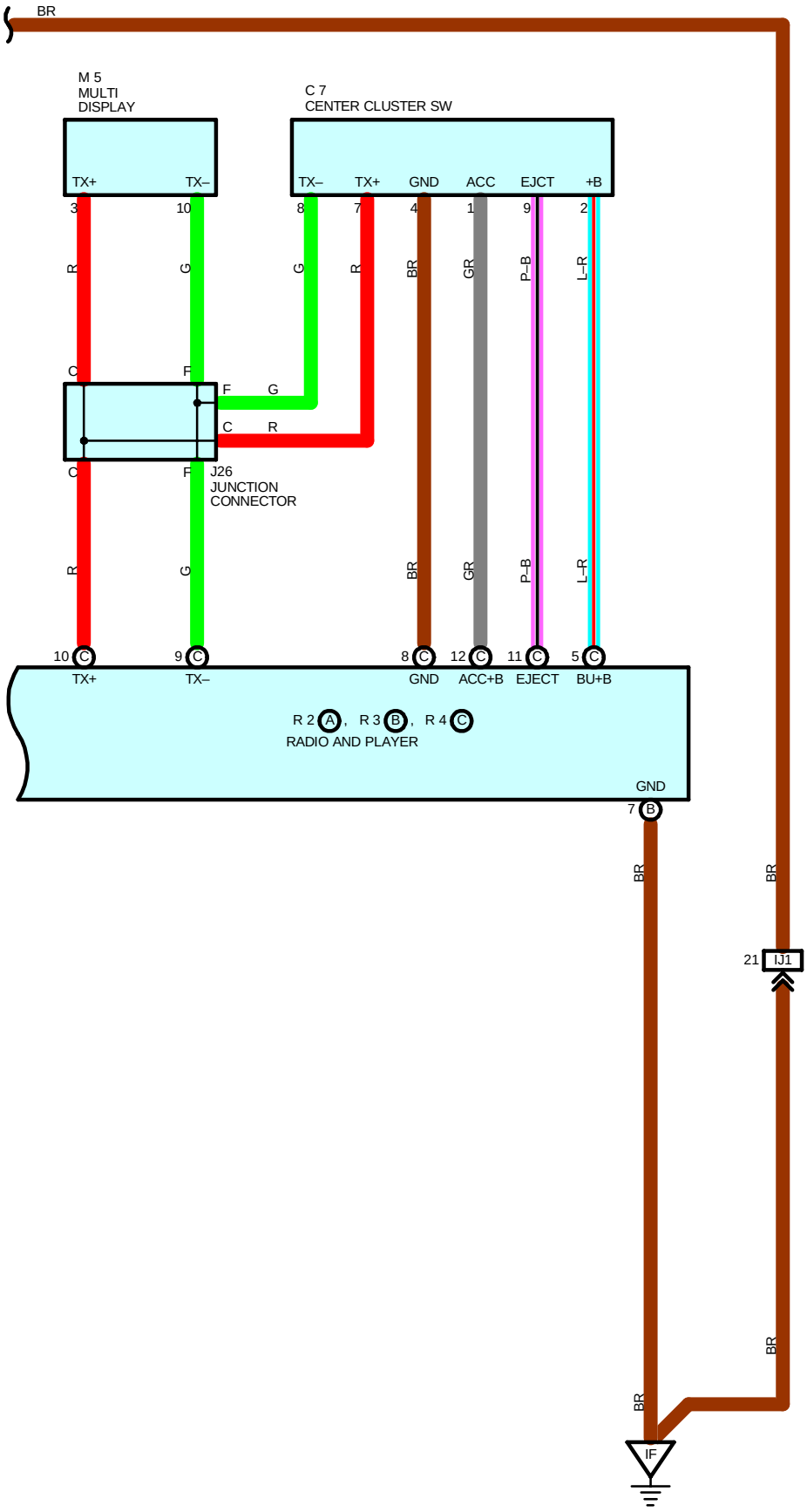

RADIO AND PLAYER

SERVICE HINTS

R3 (B) RADIO AND PLAYER

(B)4–GROUND : Always approx. **12** volts
(B)3–GROUND : Approx. **12** volts with the ignition SW at **ON** or **ACC** position
(B)7–GROUND : Always continuity

N2 NAVIGATION ECU

9–GROUND : Always approx. **12** volts
18–GROUND : Approx. **12** volts with the ignition SW at **ON** or **ACC** position
17–GROUND : Always continuity

: PARTS LOCATION

Code	See Page	Code		See Page	Code		See Page
C7	36	J27	A	37	R3	B	37
F14	38	J28	B	37	R4	C	37
F15	38	M5		37	R8		39
J24	37	N2		39	R9		39
J26	37	R2	A	37			

: JUNCTION BLOCK AND WIRE HARNESS CONNECTOR

Code	See Page	Junction Block and Wire Harness (Connector Location)
1J	27	Engine Room Main Wire and Engine Room J/B (Engine Compartment Left)
2D	30	Instrument Panel Wire and Instrument Panel J/B (Cowl Side Panel LH)
2G	31	Engine Room Main Wire and Instrument Panel J/B (Cowl Side Panel LH)

: CONNECTOR JOINING WIRE HARNESS AND WIRE HARNESS

Code	See Page	Joining Wire Harness and Wire Harness (Connector Location)
IF1	42	Instrument Panel Wire and Floor Wire (Left Kick Panel)
IG1	42	Front Door LH Wire and Instrument Panel Wire (Left Kick Panel)
IJ1	44	Floor No.3 Wire and Instrument Panel Wire (Under the Instrument Panel Center)
IJ2		
IN1	44	Front Door RH Wire and Instrument Panel Wire (Right Kick Panel)

: GROUND POINTS

Code	See Page	Ground Points Location
IF	42	Left Kick Panel

NAVIGATION SYSTEM

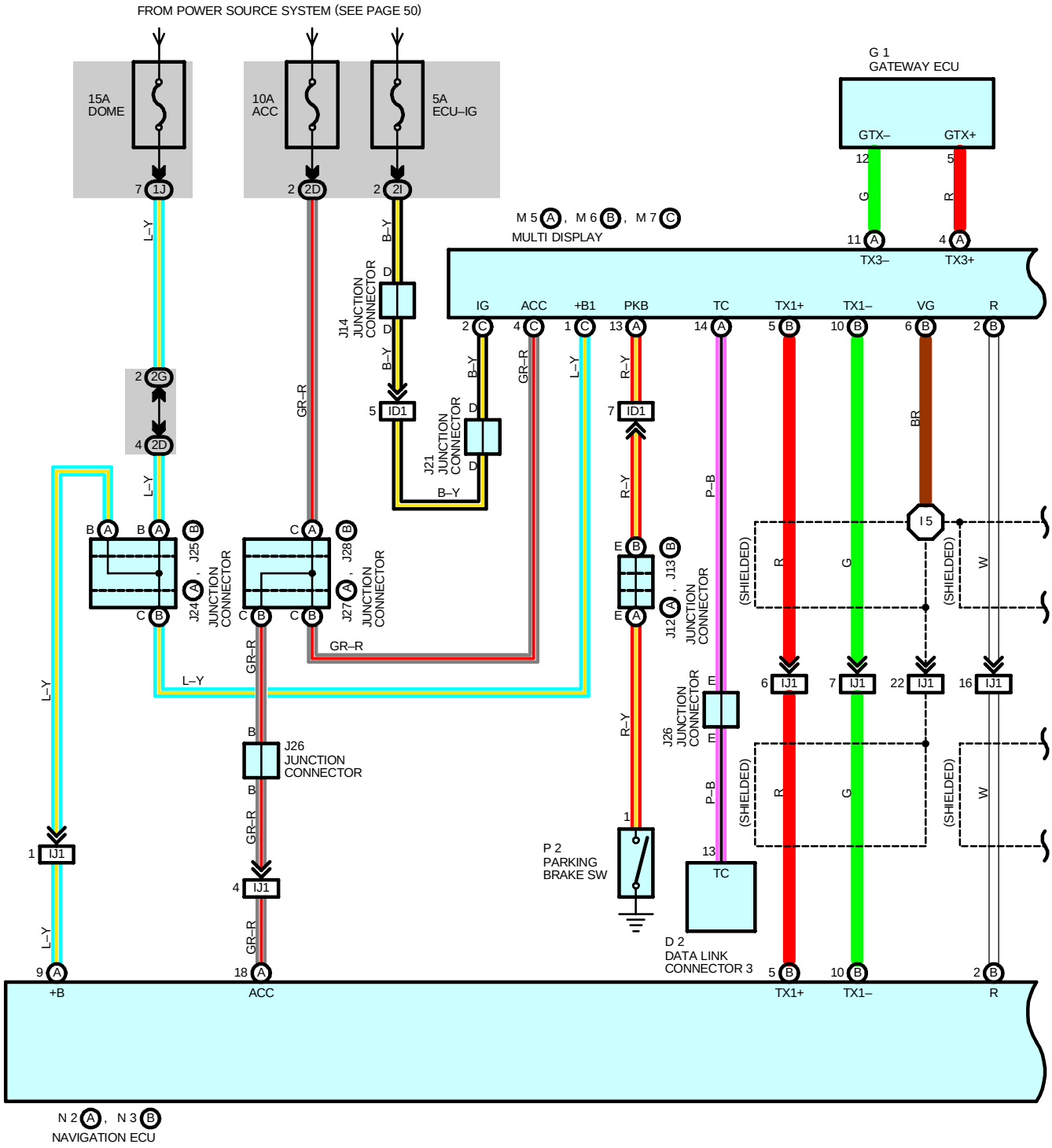

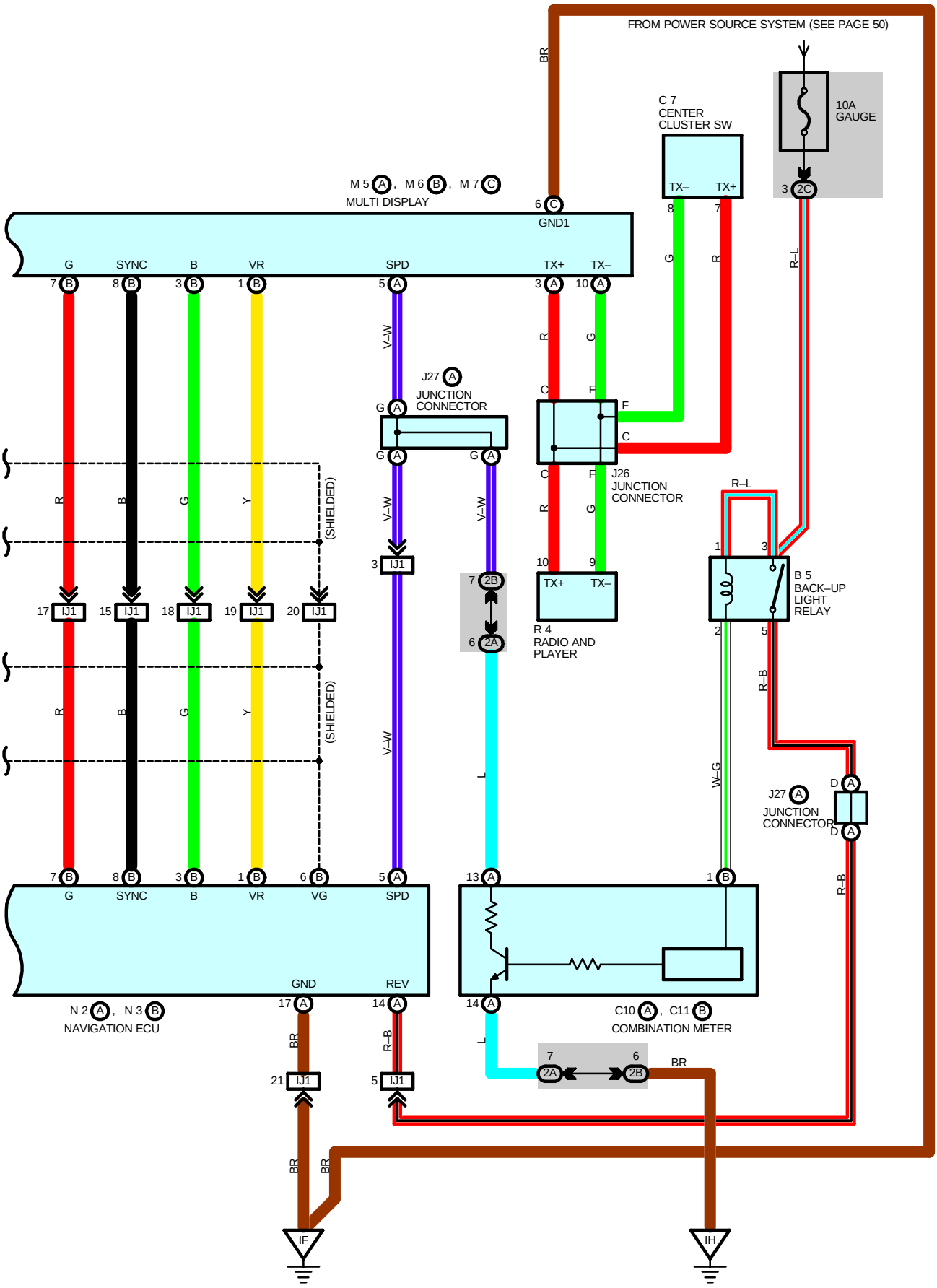
FROM POWER SOURCE SYSTEM (SEE PAGE 50)
BR
C 7
CENTER
CLUSTER SW
TX–
TX+
10A
GAUGE
3 2C
M 5 A , M 6 B , M 7 C
MULTI DISPLAY
6 C
GND1
G
SYNC
B
VR
SPD
TX+
TX–
7 B
8 B
3 B
1 B
5 A
3 A
10 A
8
7
G
R
R–L
V–W
J27 A
JUNCTION
CONNECTOR
G A
C
F
J26
JUNCTION
CONNECTOR
(SHIELDED)
3 IJ1
17 IJ1
15 IJ1
18 IJ1
19 IJ1
20 IJ1
7 2B
6 2A
R 4
RADIO AND
PLAYER
1
3
B 5
BACK–UP
LIGHT
RELAY
2
5
R–B
W–G
L
D A
J27 A
JUNCTION
CONNECTOR
VG
13 A
1 B
GND
REV
N 2 A , N 3 B
NAVIGATION ECU
17 A
14 A
C10 A , C11 B
COMBINATION METER
21 IJ1
5 IJ1
7 2A
6 2B
BR
IF
IH

NAVIGATION SYSTEM

SERVICE HINTS

N2 (A) NAVIGATION ECU

(A) 9–GROUND : Always approx. **12** volts
(A)18–GROUND : Approx. **12** volts with the ignition SW at **ON** or **ACC** position
(A)17–GROUND : Always continuity

M7 (C) MULTI DISPLAY

(C)2–GROUND : Approx. **12** volts with the ignition SW at **ON** position
(C)4–GROUND : Approx. **12** volts with the ignition SW at **ON** or **ACC** position
(C)6–GROUND : Always continuity

: PARTS LOCATION

Code	See Page	Code	See Page	Code	See Page
B5	36	J14	37	M6 B	37
C7	36	J21	37	M7 C	37
C10 A	36	J24 A	37	N2 A	39
C11 B	36	J25 B	37	N3 B	39
D2	36	J26	37	P2	37
G1	37	J27 A	37	R4	37
J12 A	37	J28 B	37		
J13 B	37	M5 A	37		

: JUNCTION BLOCK AND WIRE HARNESS CONNECTOR

Code	See Page	Junction Block and Wire Harness (Connector Location)
1J	27	Engine Room Main Wire and Engine Room J/B (Engine Compartment Left)
2A	30	Instrument Panel Wire and Instrument Panel J/B (Cowl Side Panel LH)
2B		
2C		
2D		
2G	31	Engine Room Main Wire and Instrument Panel J/B (Cowl Side Panel LH)
2I	31	Cowl Wire and Instrument Panel J/B (Cowl Side Panel LH)

: CONNECTOR JOINING WIRE HARNESS AND WIRE HARNESS

Code	See Page	Joining Wire Harness and Wire Harness (Connector Location)
ID1	42	Instrument Panel Wire and Cowl Wire (Left Kick Panel)
IJ1	44	Floor No.3 Wire and Instrument Panel Wire (Under the Instrument Panel Center)

: GROUND POINTS

Code	See Page	Ground Points Location
IF	42	Left Kick Panel
IH	42	Right Kick Panel

: SPLICE POINTS

Code	See Page	Wire Harness with Splice Points	Code	See Page	Wire Harness with Splice Points
I5	44	Instrument Panel Wire			

GATEWAY SYSTEM

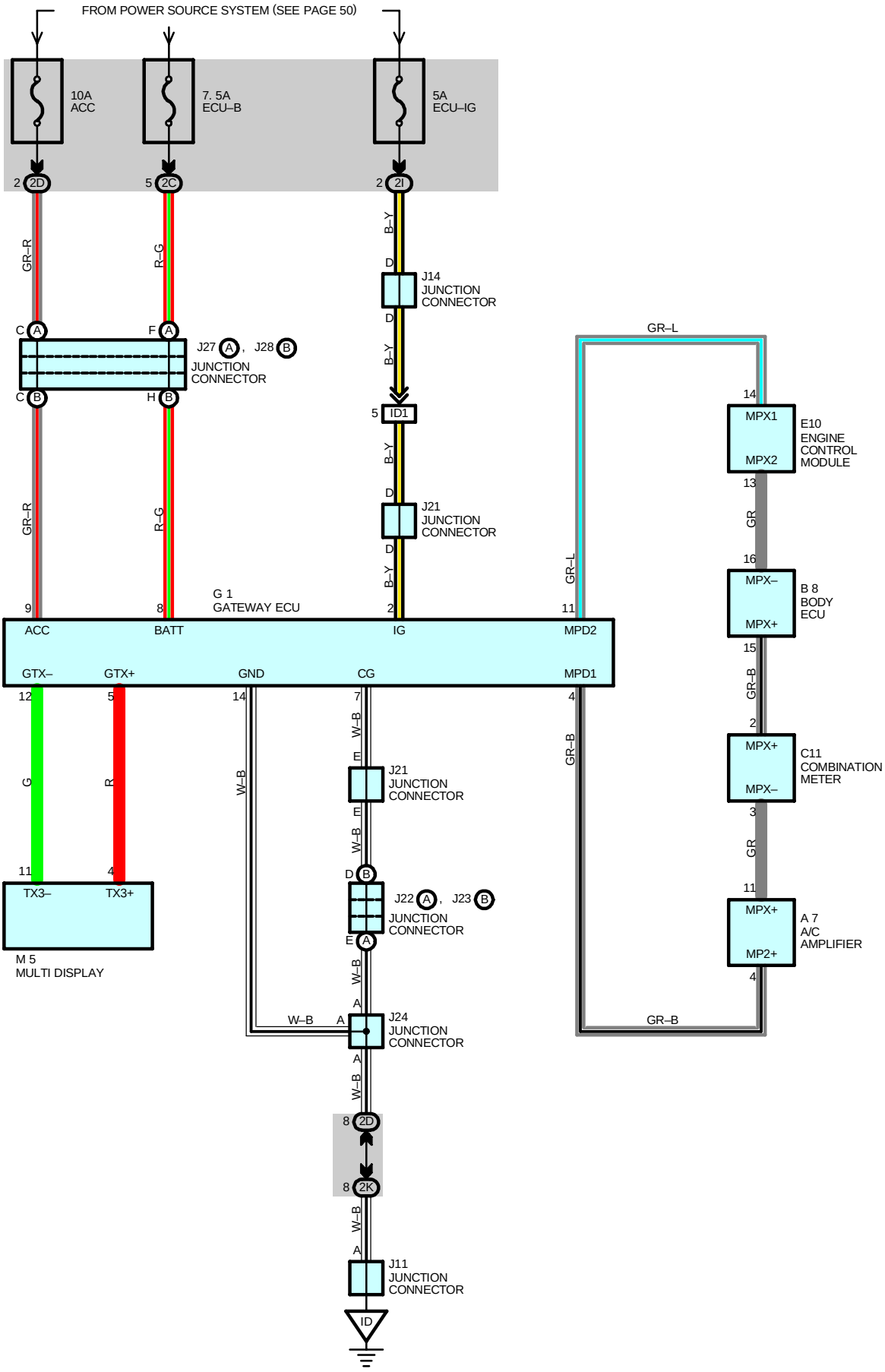

SERVICE HINTS

G1 GATEWAY ECU

8–GROUND : Always approx. **12** volts
2–GROUND : Approx. **12** volts with the ignition SW at **ON** position
9–GROUND : Approx. **12** volts with the ignition SW at **ACC** or **ON** position
7, 14–GROUND : Always continuity

: PARTS LOCATION

Code	See Page	Code		See Page	Code		See Page
A7	36	J11		37	J24		37
B8	36	J14		37	J27	A	37
C11	36	J21		37	J28	B	37
E10	36	J22	A	37	M5		37
G1	37	J23	B	37			

: JUNCTION BLOCK AND WIRE HARNESS CONNECTOR

Code	See Page	Junction Block and Wire Harness (Connector Location)
2C	30	Instrument Panel Wire and Instrument Panel J/B (Cowl Side Panel LH)
2D		
2I	31	Cowl Wire and Instrument Panel J/B (Cowl Side Panel LH)
2K		

: CONNECTOR JOINING WIRE HARNESS AND WIRE HARNESS

Code	See Page	Joining Wire Harness and Wire Harness (Connector Location)
ID1	42	Instrument Panel Wire and Cowl Wire (Left Kick Panel)

: GROUND POINTS

Code	See Page	Ground Points Location
ID	42	Cowl Side Panel LH

ELECTRIC TENSION REDUCER

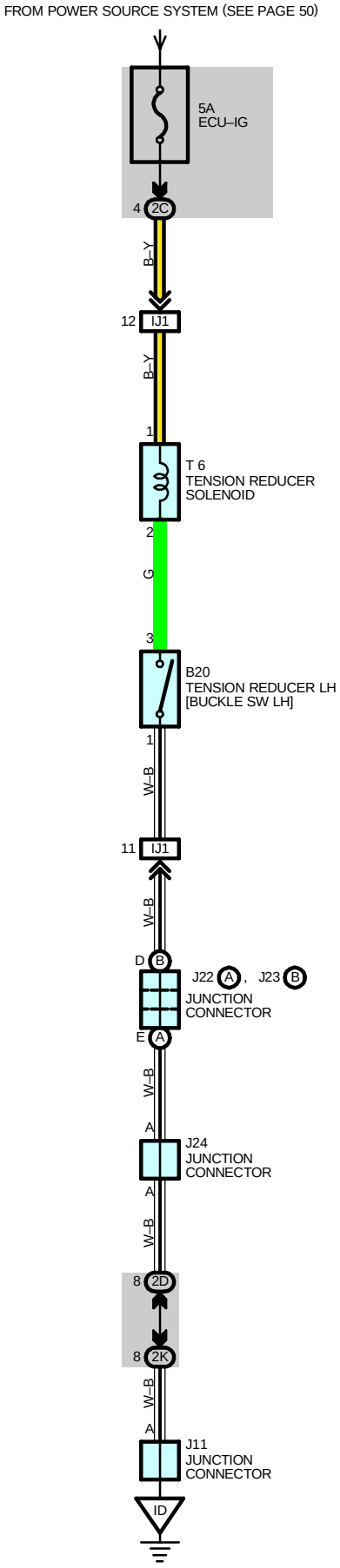

SERVICE HINTS

T6 TENSION REDUCER SOLENOID

1–GROUND : Approx. **12** volts with the ignition SW at **ON** position

B20 TENSION REDUCER LH [BUCKLE SW LH]

1–3 : Closed with driver's seat belt in use

: PARTS LOCATION

Code	See Page	Code		See Page	Code	See Page
B20	38	J22	A	37	J24	37
J11	37	J23	B	37	T6	39

: JUNCTION BLOCK AND WIRE HARNESS CONNECTOR

Code	See Page	Junction Block and Wire Harness (Connector Location)
2C	30	Instrument Panel Wire and Instrument Panel J/B (Cowl Side Panel LH)
2D		
2K	31	Cowl Wire and Instrument Panel J/B (Cowl Side Panel LH)

: CONNECTOR JOINING WIRE HARNESS AND WIRE HARNESS

Code	See Page	Joining Wire Harness and Wire Harness (Connector Location)
IJ1	44	Floor No.3 Wire and Instrument Panel Wire (Under the Instrument Panel Center)

: GROUND POINTS

Code	See Page	Ground Points Location
ID	42	Cowl Side Panel LH

EMPS

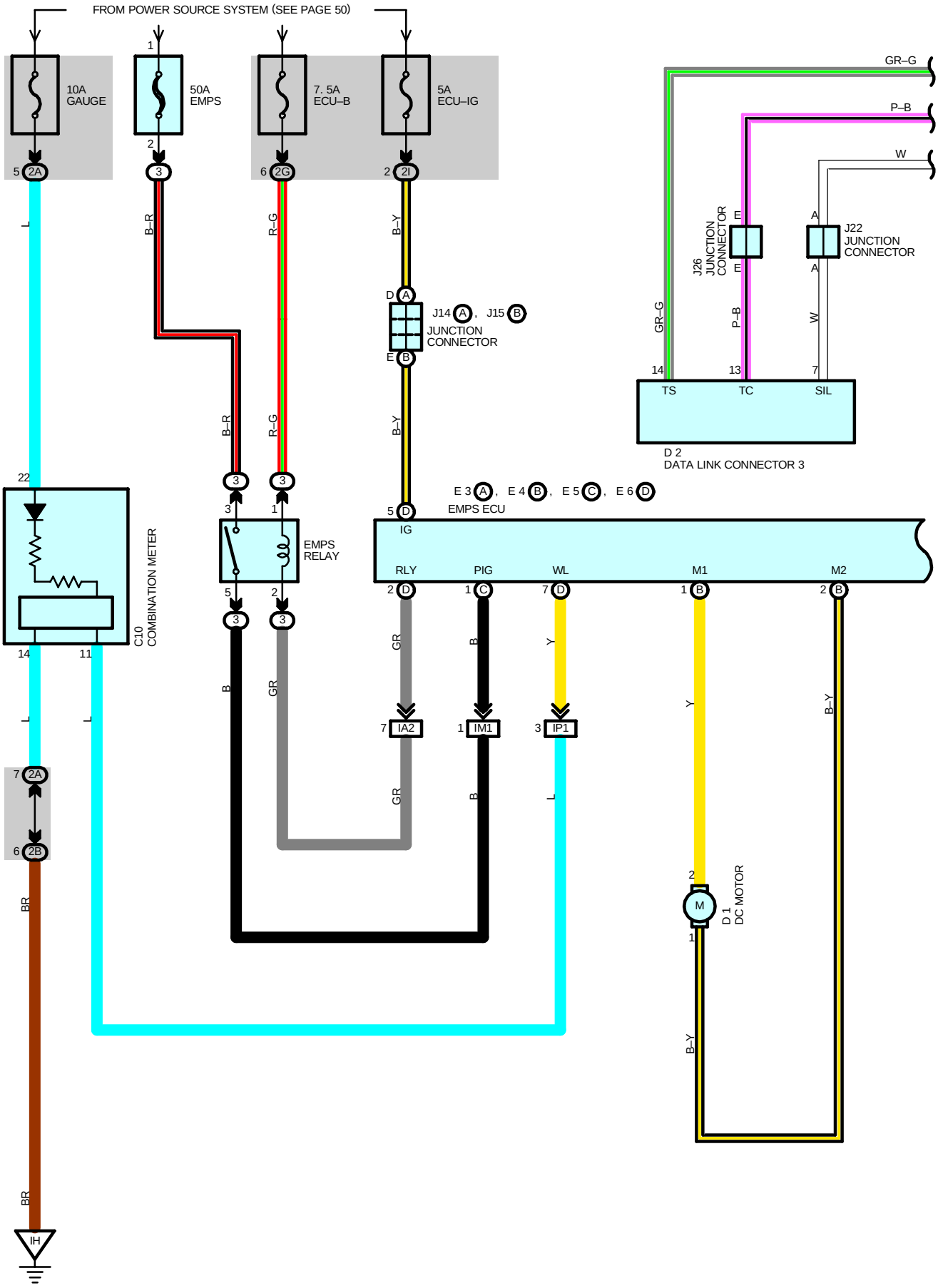
FROM POWER SOURCE SYSTEM (SEE PAGE 50)
10A GAUGE
50A EMPS
7. 5A ECU–B
5A ECU–IG
GR–G
P–B
W
J26 JUNCTION CONNECTOR
J22 JUNCTION CONNECTOR
J14 , J15
JUNCTION CONNECTOR
TS
TC
SIL
D 2
DATA LINK CONNECTOR 3
E 3 , E 4 , E 5 , E 6
EMPS ECU
IG
RLY
PIG
WL
M1
M2
EMPS RELAY
C10 COMBINATION METER
IA2
IM1
IP1
D 1
DC MOTOR
M
IH
L
B–R
R–G
B–Y
B
GR
Y
BR

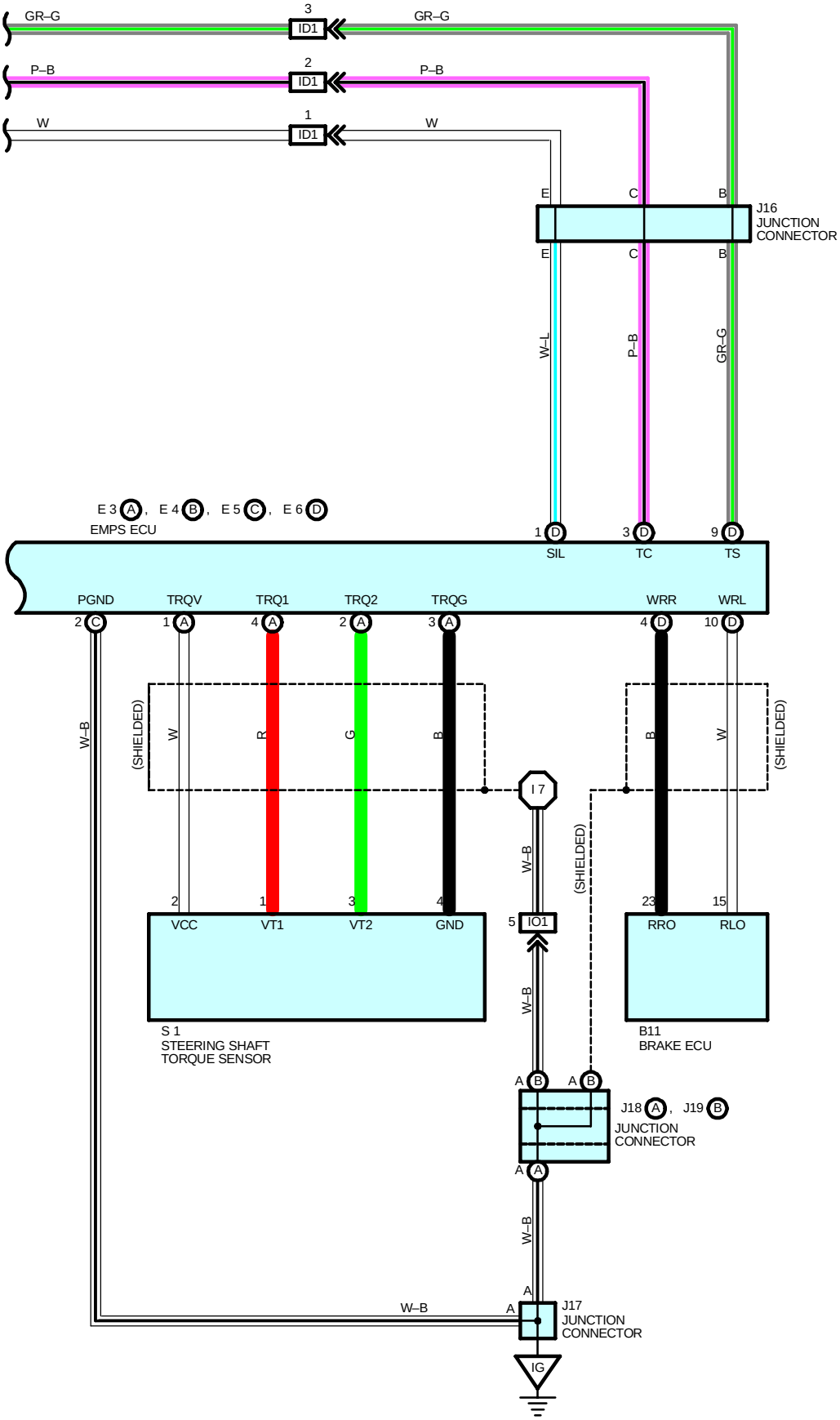
GR–G
3
ID1
GR–G
P–B
2
ID1
P–B
W
1
ID1
W
E
C
B
J16
JUNCTION
CONNECTOR
W–L
P–B
GR–G
E 3 A , E 4 B , E 5 C , E 6 D
EMPS ECU
1 D
SIL
3 D
TC
9 D
TS
PGND
TRQV
TRQ1
TRQ2
TRQG
WRR
WRL
2 C
1 A
4 A
2 A
3 A
4 D
10 D
W–B
(SHIELDED)
W
R
G
B
B
W
(SHIELDED)
I 7
W–B
(SHIELDED)
2
1
3
4
23
15
5 IO1
VCC
VT1
VT2
GND
RRO
RLO
S 1
STEERING SHAFT
TORQUE SENSOR
B11
BRAKE ECU
W–B
A B
A B
J18 A , J19 B
JUNCTION
CONNECTOR
A A
W–B
A
W–B
A
J17
JUNCTION
CONNECTOR
IG

EMPS

SYSTEM OUTLINE

In this system, the controller determines the direction and the amount of the assistant force based on the signals from the vehicle speed sensor and the torque sensor that is built in the gear box. The controller then assists the operation of the steering wheel by controlling the DC motor installed in the steering gear box.

SERVICE HINTS

E5 (C), E6 (D) EMPS ECU

(D) 5–GROUND : Approx. **12** volts with the ignition SW at **ON** position
(C) 2–GROUND : Always continuity

: PARTS LOCATION

Code		See Page	Code		See Page	Code		See Page
B11		36	E5	C	36	J18	A	37
C10		36	E6	D	36	J19	B	37
D1		34	J14	A	37	J22		37
D2		36	J15	B	37	J26		37
E3	A	36	J16		37	S1		35
E4	B	36	J17		37			

: RELAY BLOCKS

Code	See Page	Relay Blocks (Relay Block Location)
3	24	Engine Room R/B No.3 (Engine Compartment Right)

: JUNCTION BLOCK AND WIRE HARNESS CONNECTOR

Code	See Page	Junction Block and Wire Harness (Connector Location)
2A	30	Instrument Panel Wire and Instrument Panel J/B (Cowl Side Panel LH)
2B		
2G	31	Engine Room Main Wire and Instrument Panel J/B (Cowl Side Panel LH)
2I	31	Cowl Wire and Instrument Panel J/B (Cowl Side Panel LH)

: CONNECTOR JOINING WIRE HARNESS AND WIRE HARNESS

Code	See Page	Joining Wire Harness and Wire Harness (Connector Location)
IA2	42	Engine Room Main Wire and Cowl Wire (Cowl Side Panel LH)
ID1	42	Instrument Panel Wire and Cowl Wire (Left Kick Panel)
IM1	44	Engine Room Main Wire and Cowl Wire (Right Kick Panel)
IO1	44	Engine Wire and Cowl Wire (Right Kick Panel)
IP1	44	Instrument Panel Wire and Cowl Wire (Right Kick Panel)

: GROUND POINTS

Code	See Page	Ground Points Location
IG	42	Cowl Side Panel RH
IH	42	Right Kick Panel

: SPLICE POINTS

Code	See Page	Wire Harness with Splice Points	Code	See Page	Wire Harness with Splice Points
I7	44	Engine Wire			

NOTICE: When inspecting or repairing the SRS, perform the operation in accordance with the following precautionary instructions and the procedure and precautions in the Repair Manual for the applicable model year.

- Malfunction symptoms of the SRS are difficult to confirm, so the DTCs become the most important source of information when troubleshooting. When troubleshooting the SRS, always inspect the DTCs before disconnecting the battery.
- **Work must be started after 90 seconds from when the ignition switch is turned to the "LOCK" position and the negative (–) terminal cable is disconnected from the battery.**
  (The SRS is equipped with a back–up power source so that if work is started within 90 seconds from disconnecting the negative (–) terminal cable of the battery, the SRS may be deployed.)
- When the negative (–) terminal cable is disconnected from the battery, the memory of the clock and audio system will be canceled. So before starting work, make a record of the contents memorized in the audio memory system. When work is finished, reset the audio systems as they were before and adjust the clock. To avoid erasing the memory in each memory system, never use a back–up power supply from outside the vehicle.
- Before repairs, remove the airbag sensor if shocks are likely to be applied to the sensor during repairs.
- Do not expose the steering wheel pad, front passenger airbag assembly, side airbag assembly, seat belt pretensioner, airbag sensor assembly or side airbag sensor directly to hot air or flames.
- Even in cases of a minor collision where the SRS does not deploy, the steering wheel pad, front passenger airbag assembly, side airbag assembly, seat belt pretensioner, airbag sensor assembly and side airbag sensor assembly should be inspected.
- Never use SRS parts from another vehicle. When replacing parts, replace them with new parts.
- Never disassemble and repair the steering wheel pad, front passenger airbag assembly, side airbag assembly, seat belt pretensioner, airbag sensor assembly or side airbag sensor assembly in order to reuse it.
- If the steering wheel pad, front passenger airbag assembly, side airbag assembly, seat belt pretensioner, airbag sensor assembly or side airbag sensor assembly has been dropped, or if there are cracks, dents or other defects in the case, bracket or connector, replace them with new ones.
- Use a volt/ohmmeter with high impedance (10 kΩ/V minimum) for troubleshooting the system's electrical circuits.
- Information labels are attached to the periphery of the SRS components. Follow the instructions on the notices.
- After work on the SRS is completed, perform the SRS warning light check.
- If the vehicle is equipped with a mobile communication system, refer to the precaution in the IN section of the Repair Manual.

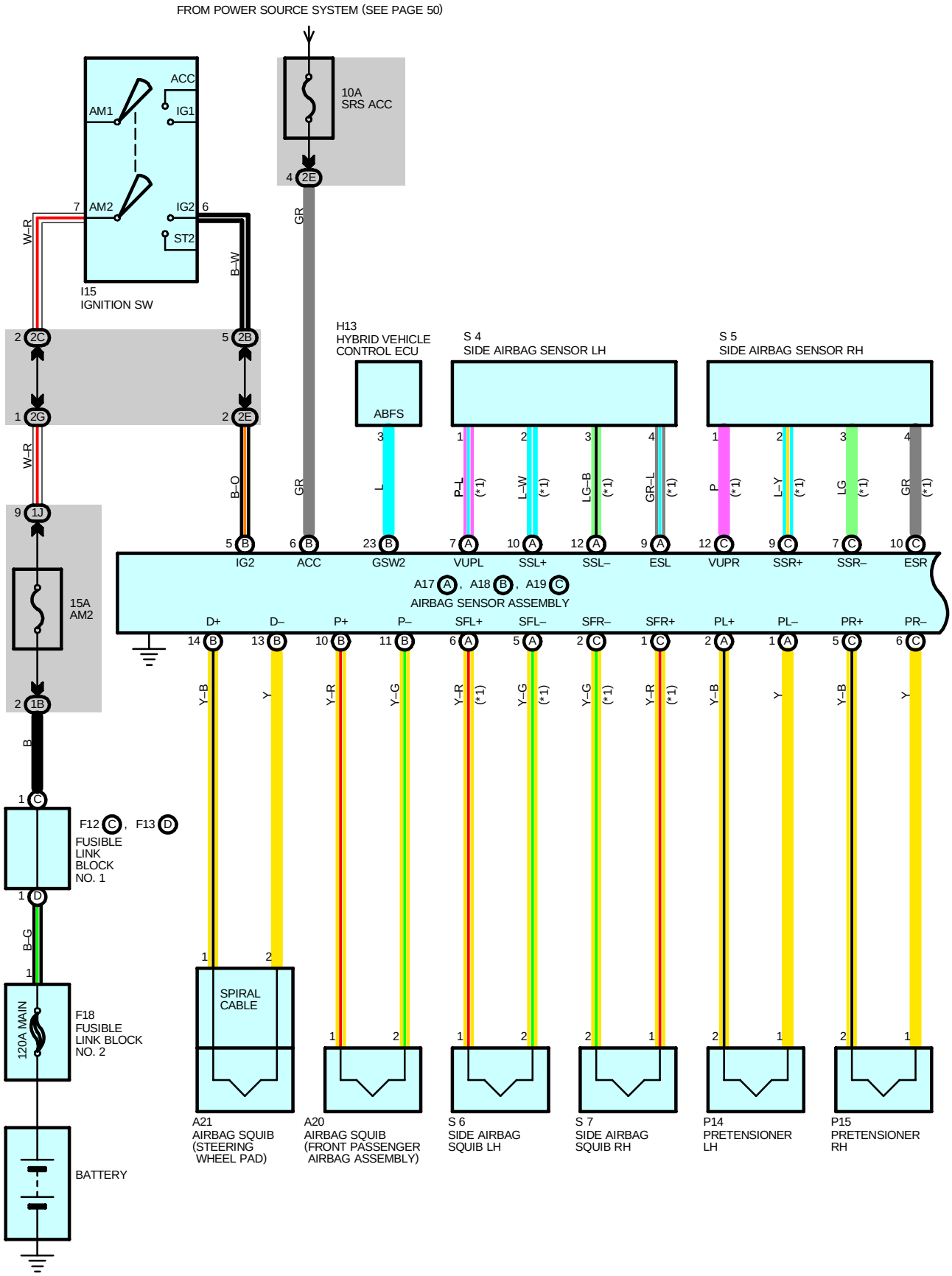
FROM POWER SOURCE SYSTEM (SEE PAGE 50)
10A
SRS ACC
4 2E
GR
ACC
AM1
IG1
AM2
IG2 6
ST2
7
W–R
B–W
I15
IGNITION SW
2 2C
5 2B
1 2G
2 2E
W–R
B–O
GR
H13
HYBRID VEHICLE
CONTROL ECU
ABFS
3
L
S 4
SIDE AIRBAG SENSOR LH
1 P–L (*1)
2 L–W (*1)
3 LG–B (*1)
4 GR–L (*1)
S 5
SIDE AIRBAG SENSOR RH
1 P (*1)
2 L–Y (*1)
3 LG (*1)
4 GR (*1)
9 1J
15A
AM2
2 1B
B
1 C
F12 C , F13 D
FUSIBLE
LINK
BLOCK
NO. 1
1 D
B–G
1
120A MAIN
F18
FUSIBLE
LINK BLOCK
NO. 2
BATTERY
5 B IG2
6 B ACC
23 B GSW2
7 A VUPL
10 A SSL+
12 A SSL–
9 A ESL
12 C VUPR
9 C SSR+
7 C SSR–
10 C ESR
A17 A , A18 B , A19 C
AIRBAG SENSOR ASSEMBLY
D+ D– P+ P– SFL+ SFL– SFR– SFR+ PL+ PL– PR+ PR–
14 B 13 B 10 B 11 B 6 A 5 A 2 C 1 C 2 A 1 A 5 C 6 C
Y–B Y Y–R Y–G Y–R (*1) Y–G (*1) Y–G (*1) Y–R (*1) Y–B Y Y–B Y
SPIRAL
CABLE
A21
AIRBAG SQUIB
(STEERING
WHEEL PAD)
A20
AIRBAG SQUIB
(FRONT PASSENGER
AIRBAG ASSEMBLY)
S 6
SIDE AIRBAG
SQUIB LH
S 7
SIDE AIRBAG
SQUIB RH
P14
PRETENSIONER
LH
P15
PRETENSIONER
RH

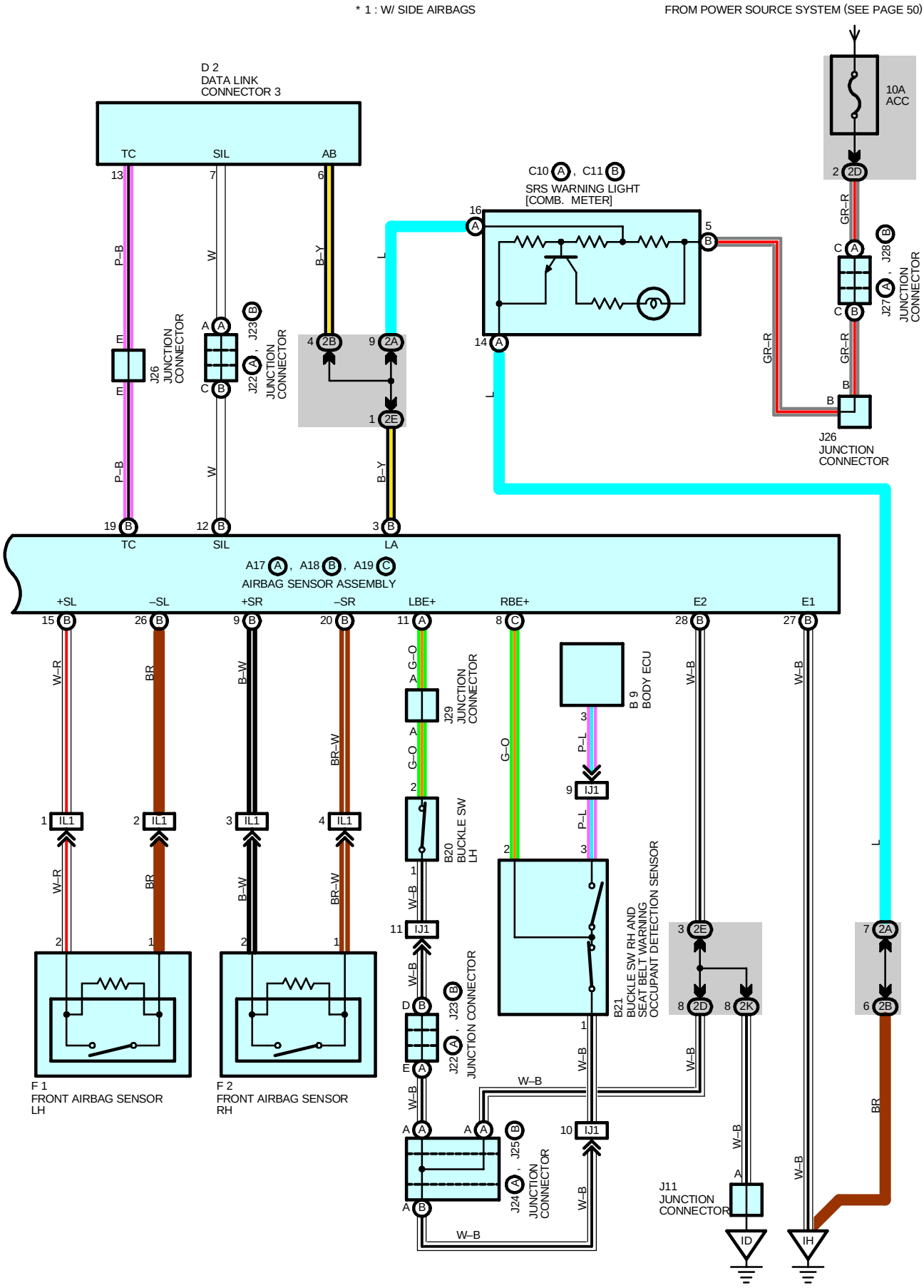
* 1 : W/ SIDE AIRBAGS
FROM POWER SOURCE SYSTEM (SEE PAGE 50)
D 2
DATA LINK
CONNECTOR 3
TC
SIL
AB
10A
ACC
C10 , C11
SRS WARNING LIGHT
[COMB. METER]
J26
JUNCTION
CONNECTOR
J22 , J23
JUNCTION
CONNECTOR
J27 , J28
JUNCTION
CONNECTOR
A17 , A18 , A19
AIRBAG SENSOR ASSEMBLY
+SL
–SL
+SR
–SR
LBE+
RBE+
E2
E1
LA
J29
JUNCTION
CONNECTOR
B20
BUCKLE SW
LH
B21
BUCKLE SW RH AND
SEAT BELT WARNING
OCCUPANT DETECTION SENSOR
B 9
BODY ECU
J24 , J25
JUNCTION
CONNECTOR
J11
JUNCTION
CONNECTOR
F 1
FRONT AIRBAG SENSOR
LH
F 2
FRONT AIRBAG SENSOR
RH
W–R
BR
B–W
BR–W
G–O
P–L
W–B
GR–R
B–Y
P–B
W
L
BR
ID
IH

SRS

SYSTEM OUTLINE

The SRS is a driver and front passenger protection device which has a supplemental role to the seat belts.
When the ignition SW is turned to ACC or ON, current from the SRS ACC fuse flows to TERMINAL (B) 6 of the airbag sensor assembly. Only when the ignition SW is on does the current flow TERMINAL (B) 5 of the airbag sensor assembly.
If an accident occurs while driving, when the frontal impact exceeds a set level, current flows to TERMINALS (B) 14, (B) 10, (A) 2 and (C) 5 of the airbag sensor assembly to TERMINAL 1 of the airbag squibs and the pretensioners to TERMINAL 2 to TERMINALS (B) 13, (B) 11, (A) 1 and (C) 6 of the airbag sensor assembly to TERMINAL (B) 27, (B) 28 or BODY GROUND to GROUND, so that current flows to the front airbag squibs and the pretensioners and causes them to operate.
When the side impact also exceeds a set level, current from the ignition SW (IG2) or SRS ACC fuse flows to TERMINALS (A) 5, (C) 2, (A) 2 and (C) 5 of the airbag sensor assembly to TERMINAL 1 of the side airbag squibs and the pretensioners to TERMINAL 2 to TERMINALS (A) 6, (C) 1, (A) 1 and (C) 6 of the airbag sensor assembly to TERMINAL (B) 27, (B) 28 or BODY GROUND to GROUND, causing side airbag squibs and the pretensioners to operate.
The airbag stored inside the steering wheel pad is instantaneously expanded to soften the shock to the driver.
The airbag stored inside the passenger's instrument panel is instantaneously expanded to soften the shock to the front passenger.
Side airbags are instantaneously expanded to soften the shock of side to the driver and front passenger (w/ side airbags).
The pretensioners make sure of the seat belt restrainability.

○ : PARTS LOCATION

Code	See Page	Code	See Page	Code	See Page
A17 A	36	F1	34	J25 B	37
A18 B	36	F2	34	J26	37
A19 C	36	F12 C	34	J27 A	37
A20	36	F13 D	34	J28 B	37
A21	36	F18	38	J29	37
B9	36	H13	37	P14	39
B20	38	I15	37	P15	39
B21	38	J11	37	S4	39
C10 A	36	J22 A	37	S5	39
C11 B	36	J23 B	37	S6	39
D2	36	J24 A	37	S7	39

⬭ : JUNCTION BLOCK AND WIRE HARNESS CONNECTOR

Code	See Page	Junction Block and Wire Harness (Connector Location)
1B	27	Engine Room Main Wire and Engine Room J/B (Engine Compartment Left)
1J		
2A	30	Instrument Panel Wire and Instrument Panel J/B (Cowl Side Panel LH)
2B		
2C		
2D		
2E		
2G	31	Engine Room Main Wire and Instrument Panel J/B (Cowl Side Panel LH)
2K	31	Cowl Wire and Instrument Panel J/B (Cowl Side Panel LH)

▭ : CONNECTOR JOINING WIRE HARNESS AND WIRE HARNESS

Code	See Page	Joining Wire Harness and Wire Harness (Connector Location)
IJ1	44	Floor No.3 Wire and Instrument Panel Wire (Under the Instrument Panel Center)
IL1	44	Instrument Panel Wire and Engine Room Main Wire (Right Kick Panel)

▽ : GROUND POINTS

Code	See Page	Ground Points Location
ID	42	Cowl Side Panel LH
IH	42	Right Kick Panel

ABS

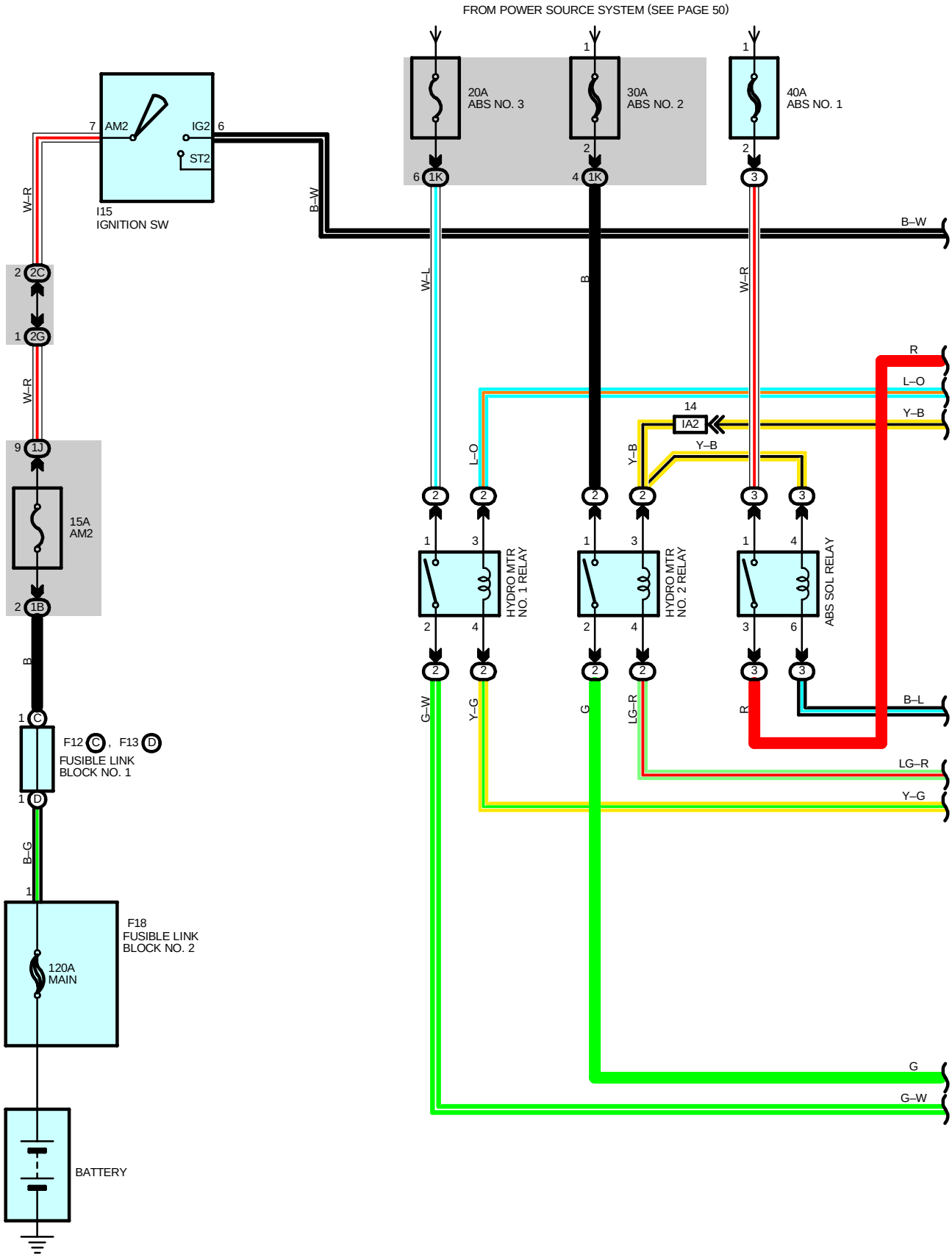
FROM POWER SOURCE SYSTEM (SEE PAGE 50)
20A
ABS NO. 3
30A
ABS NO. 2
40A
ABS NO. 1
AM2
IG2
ST2
I15
IGNITION SW
W–R
B–W
W–L
B
R
L–O
Y–B
G–W
Y–G
G
LG–R
B–L
2C
2G
1J
15A
AM2
1B
1C
F12 C , F13 D
FUSIBLE LINK
BLOCK NO. 1
1D
B–G
F18
FUSIBLE LINK
BLOCK NO. 2
120A
MAIN
BATTERY
IA2
HYDRO MTR
NO. 1 RELAY
HYDRO MTR
NO. 2 RELAY
ABS SOL RELAY

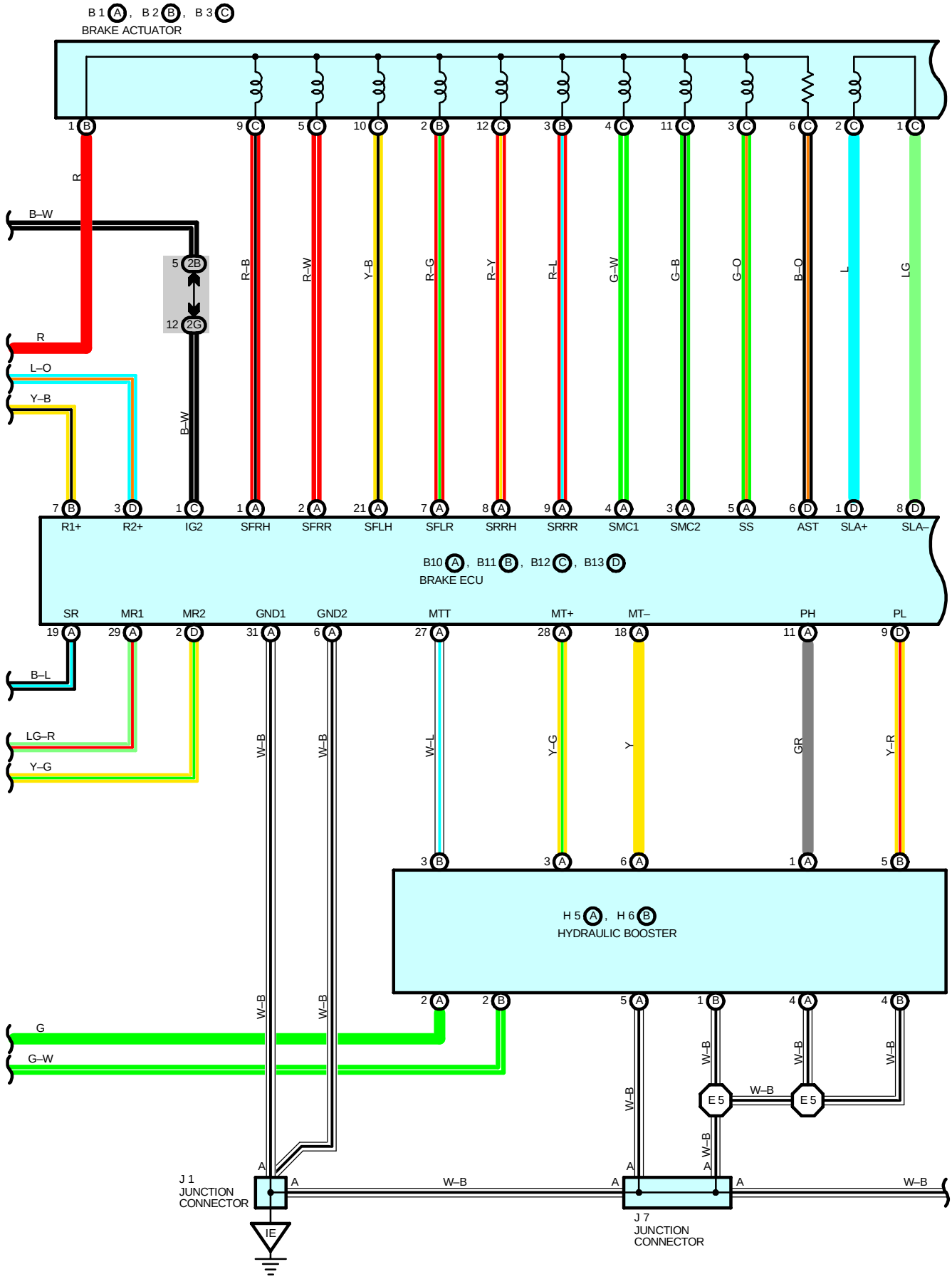
B 1 A , B 2 B , B 3 C
BRAKE ACTUATOR
1 B
9 C
5 C
10 C
2 B
12 C
3 B
4 C
11 C
3 C
6 C
2 C
1 C
R
B–W
5 2B
12 2G
R
L–O
Y–B
B–W
R–B
R–W
Y–B
R–G
R–Y
R–L
G–W
G–B
G–O
B–O
L
LG
7 B
3 D
1 C
1 A
2 A
21 A
7 A
8 A
9 A
4 A
3 A
5 A
6 D
1 D
8 D
R1+
R2+
IG2
SFRH
SFRR
SFLH
SFLR
SRRH
SRRR
SMC1
SMC2
SS
AST
SLA+
SLA–
B10 A , B11 B , B12 C , B13 D
BRAKE ECU
SR
MR1
MR2
GND1
GND2
MTT
MT+
MT–
PH
PL
19 A
29 A
2 D
31 A
6 A
27 A
28 A
18 A
11 A
9 D
B–L
LG–R
Y–G
W–B
W–B
W–L
Y–G
Y
GR
Y–R
3 B
3 A
6 A
1 A
5 B
H 5 A , H 6 B
HYDRAULIC BOOSTER
2 A
2 B
5 A
1 B
4 A
4 B
G
G–W
W–B
W–B
W–B
W–B
W–B
W–B
E 5
E 5
A
A
A
A
A
A
J 1
JUNCTION
CONNECTOR
IE
W–B
J 7
JUNCTION
CONNECTOR
W–B

ABS

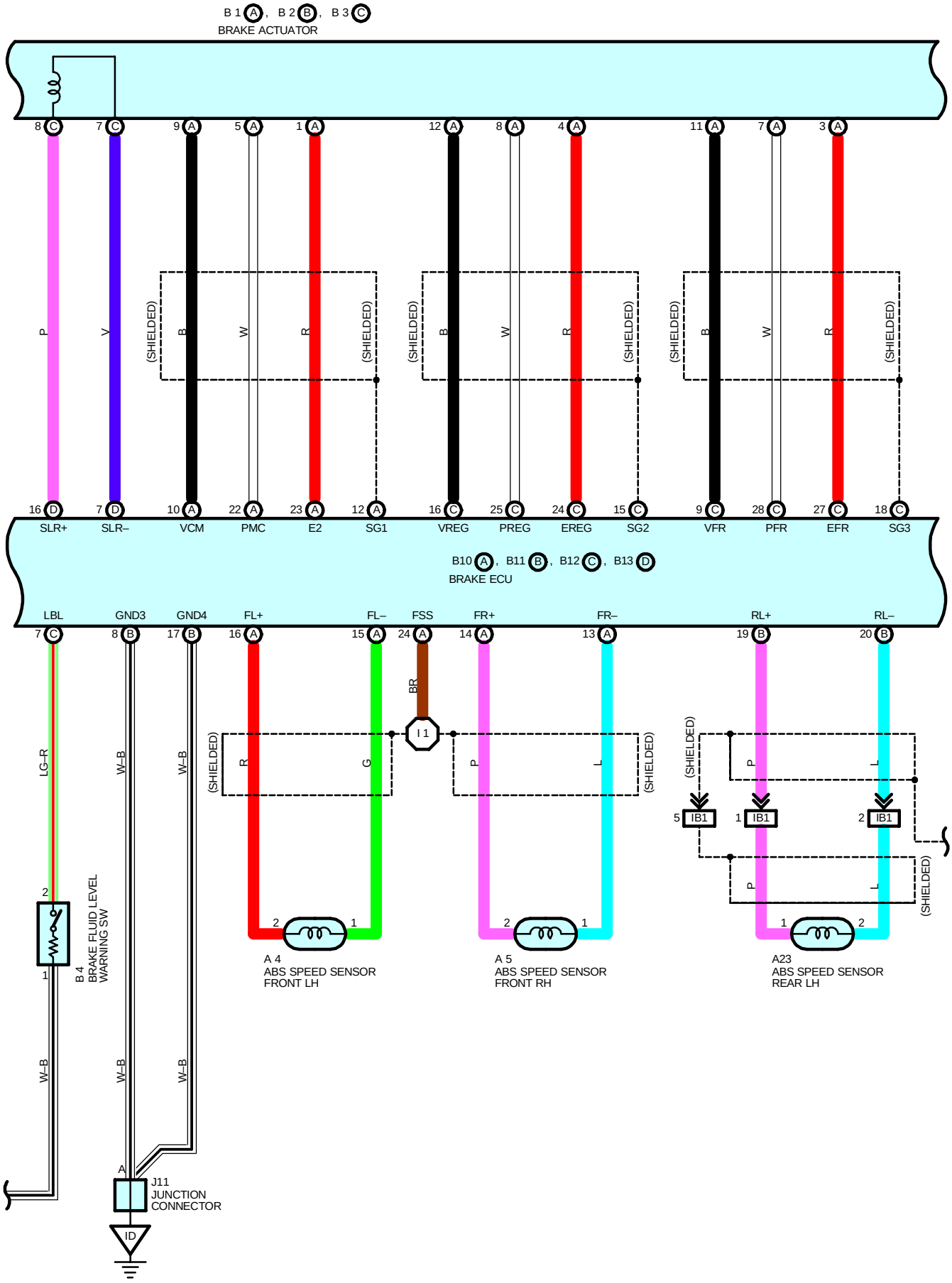
B 1 A , B 2 B , B 3 C
BRAKE ACTUATOR
8 C
7 C
9 A
5 A
1 A
12 A
8 A
4 A
11 A
7 A
3 A
P
V
(SHIELDED)
B
W
R
(SHIELDED)
16 D
SLR+
7 D
SLR–
10 A
VCM
22 A
PMC
23 A
E2
12 A
SG1
16 C
VREG
25 C
PREG
24 C
EREG
15 C
SG2
9 C
VFR
28 C
PFR
27 C
EFR
18 C
SG3
B10 A , B11 B , B12 C , B13 D
BRAKE ECU
LBL
GND3
GND4
FL+
FL–
FSS
FR+
FR–
RL+
RL–
7 C
8 B
17 B
16 A
15 A
24 A
14 A
13 A
19 B
20 B
LG–R
W–B
BR
I 1
G
L
IB1
5 IB1
1 IB1
2 IB1
2
1
B 4
BRAKE FLUID LEVEL
WARNING SW
A 4
ABS SPEED SENSOR
FRONT LH
A 5
ABS SPEED SENSOR
FRONT RH
A23
ABS SPEED SENSOR
REAR LH
A
J11
JUNCTION
CONNECTOR
ID

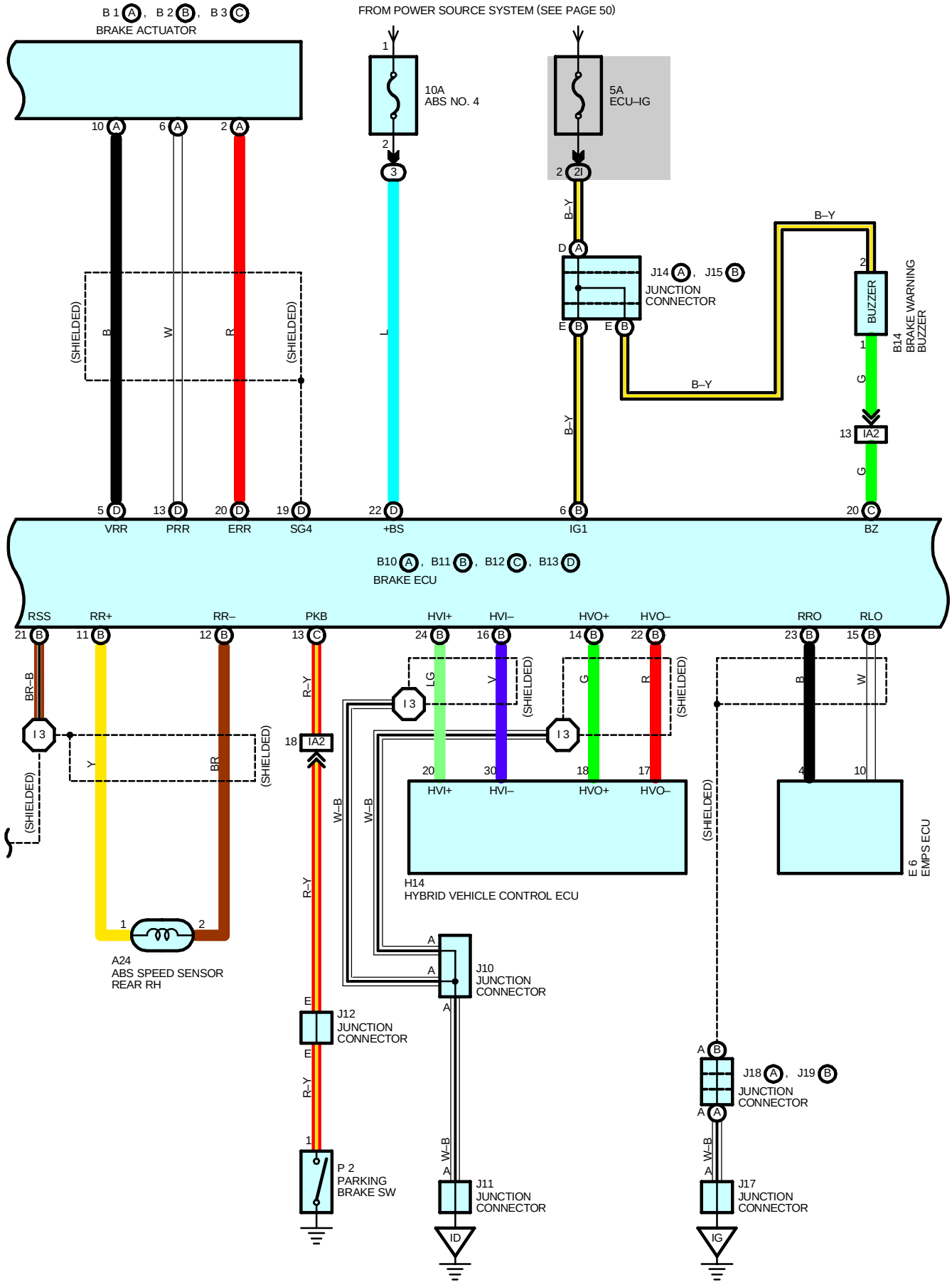
B 1 A , B 2 B , B 3 C
BRAKE ACTUATOR
FROM POWER SOURCE SYSTEM (SEE PAGE 50)
10A
ABS NO. 4
5A
ECU–IG
J14 A , J15 B
JUNCTION
CONNECTOR
BUZZER
B14
BRAKE WARNING
BUZZER
(SHIELDED)
B
W
R
L
B–Y
G
IA2
VRR
PRR
ERR
SG4
+BS
IG1
BZ
B10 A , B11 B , B12 C , B13 D
BRAKE ECU
RSS
RR+
RR–
PKB
HVI+
HVI–
HVO+
HVO–
RRO
RLO
BR–B
Y
BR
R–Y
LG
V
G
R
W–B
I 3
A24
ABS SPEED SENSOR
REAR RH
H14
HYBRID VEHICLE CONTROL ECU
E 6
EMPS ECU
J10
JUNCTION
CONNECTOR
J12
JUNCTION
CONNECTOR
P 2
PARKING
BRAKE SW
J11
JUNCTION
CONNECTOR
ID
J18 A , J19 B
JUNCTION
CONNECTOR
J17
JUNCTION
CONNECTOR
IG

ABS

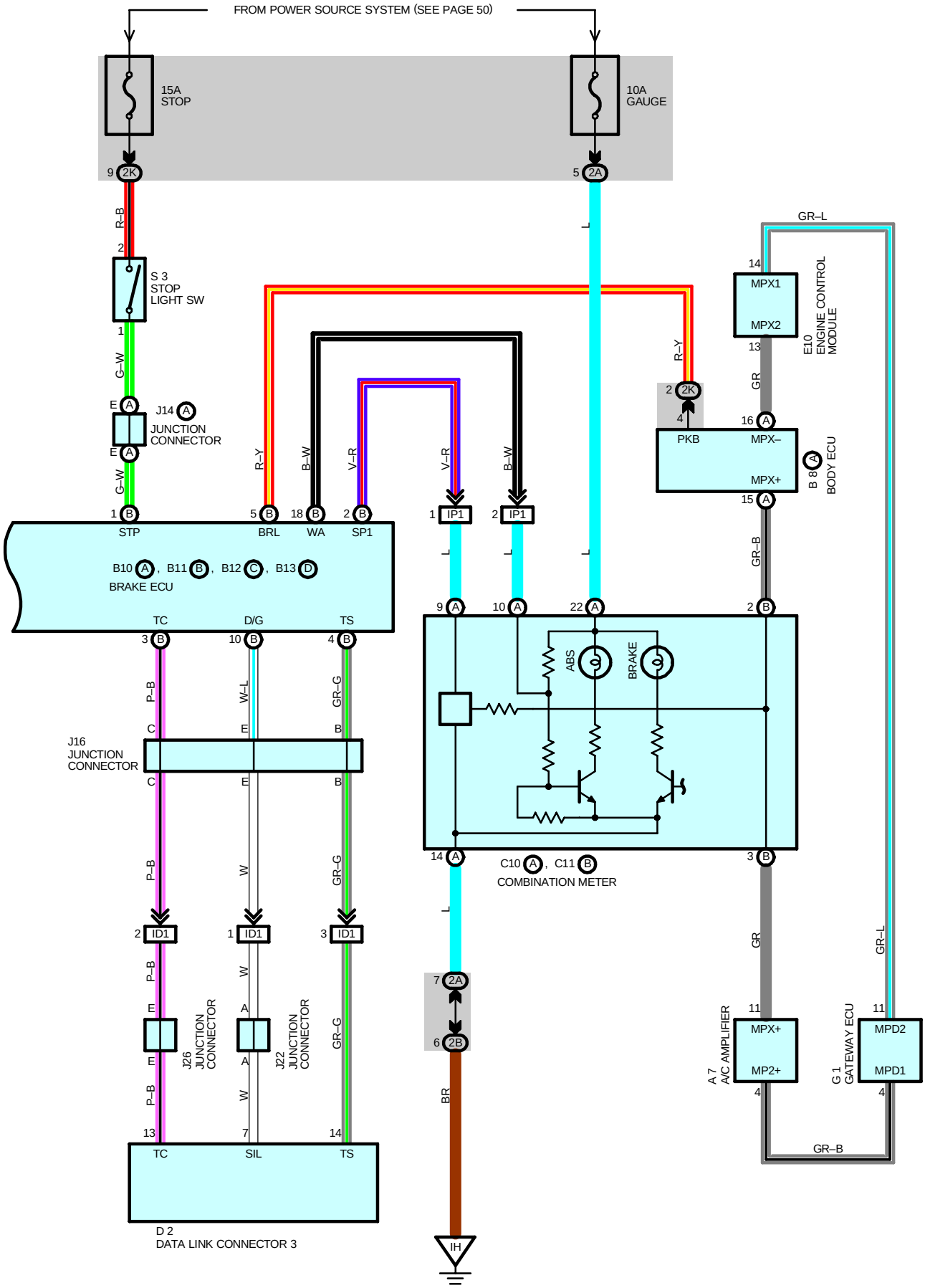
FROM POWER SOURCE SYSTEM (SEE PAGE 50)
15A
STOP
10A
GAUGE
9 2K
5 2A
R–B
L
S 3
STOP
LIGHT SW
G–W
J14
JUNCTION
CONNECTOR
R–Y
B–W
V–R
V–R
B–W
GR–L
14
MPX1
MPX2
13
E10
ENGINE CONTROL
MODULE
GR
2 2K
4
PKB
16
MPX–
MPX+
B 8
BODY ECU
15
GR–B
1 B
STP
5 B
BRL
18 B
WA
2 B
SP1
1 IP1
2 IP1
B10 A, B11 B, B12 C, B13 D
BRAKE ECU
TC
D/G
TS
9 A
10 A
22 A
2 B
ABS
BRAKE
3 B
10 B
4 B
P–B
W–L
GR–G
C
E
B
J16
JUNCTION
CONNECTOR
14 A
C10 A, C11 B
COMBINATION METER
3 B
W
2 ID1
1 ID1
3 ID1
7 2A
6 2B
BR
J26
JUNCTION
CONNECTOR
A
J22
JUNCTION
CONNECTOR
A 7
A/C AMPLIFIER
11
MPX+
MP2+
4
G 1
GATEWAY ECU
11
MPD2
MPD1
4
13
TC
7
SIL
14
TS
D 2
DATA LINK CONNECTOR 3
IH

SYSTEM OUTLINE

1. INPUT SIGNALS

(1) Speed sensor signal

The speed of the wheels is detected and input to TERMINALS FL+, FR+, RL+ and RR+ of the brake ECU.

(2) Stop light SW signal

A signal is input to TERMINAL STP of the brake ECU when the brake pedal is depressed.

2. ABS SYSTEM OPERATION

During sudden braking the brake ECU has signals input from each sensor, which controls the current to the solenoid inside the actuator and lets the hydraulic pressure acting on each wheel cylinder escape to the reservoir. The pump inside the actuator is also operating at this time and it returns the brake fluid from the reservoir to the master cylinder, thus preventing locking of the vehicle wheels.

If the brake ECU judges that the hydraulic pressure acting on the wheel cylinder is insufficient, the current on the solenoid is controlled and the hydraulic pressure is increased. Holding of the hydraulic pressure is also controlled by the brake ECU, by the same method as above. Pressure reduction, holding and increase are repeated to maintain vehicle stability and to improve steerability during sudden braking.

SERVICE HINTS

A4, A5 ABS SPEED SENSOR FRONT LH, RH

2–1 : **1.4**–**1.8** kΩ (**20**˚C, **68**˚F)

A23, A24 ABS SPEED SENSOR REAR LH, RH

2–1 : **1.04**–**1.3** kΩ (**20**˚C, **68**˚F)

B10 (A), B11 (B), B12 (C), B13 (D) BRAKE ECU

(B) 6, (C) 1–GROUND : Approx. **12** volts with the ignition SW at **ON** position

(D) 22–GROUND : Always approx. **12** volts

(A) 6, (A)31–GROUND : Always continuity

: PARTS LOCATION

Code	See Page	Code	See Page	Code	See Page
A4	34	C10 A	36	J10	37
A5	34	C11 B	36	J11	37
A7	36	D2	36	J12	37
A23	38	E6	36	J14 A	37
A24	38	E10	36	J15 B	37
B1 A	34	F12 C	34	J16	37
B2 B	34	F13 D	34	J17	37
B3 C	34	F18	38	J18 A	37
B4	34	G1	37	J19 B	37
B8 A	36	H5 A	34	J22	37
B10 A	36	H6 B	34	J26	37
B11 B	36	H14	37	P2	37
B12 C	36	I15	37	S3	37
B13 D	36	J1	37		
B14	36	J7	37		

: RELAY BLOCKS

Code	See Page	Relay Blocks (Relay Block Location)
2	23	Engine Room R/B No.2 (Right Side of Reserve Tank)
3	24	Engine Room R/B No.3 (Engine Compartment Right)

ABS

: JUNCTION BLOCK AND WIRE HARNESS CONNECTOR

Code	See Page	Junction Block and Wire Harness (Connector Location)
1B	27	Engine Room Main Wire and Engine Room J/B (Engine Compartment Left)
1J		
1K		
2A	30	Instrument Panel Wire and Instrument Panel J/B (Cowl Side Panel LH)
2B		
2C		
2G	31	Engine Room Main Wire and Instrument Panel J/B (Cowl Side Panel LH)
2I	31	Cowl Wire and Instrument Panel J/B (Cowl Side Panel LH)
2K		

: CONNECTOR JOINING WIRE HARNESS AND WIRE HARNESS

Code	See Page	Joining Wire Harness and Wire Harness (Connector Location)
IA2	42	Engine Room Main Wire and Cowl Wire (Cowl Side Panel LH)
IB1	42	Floor Wire and Cowl Wire (Cowl Side Panel LH)
ID1	42	Instrument Panel Wire and Cowl Wire (Left Kick Panel)
IP1	44	Instrument Panel Wire and Cowl Wire (Right Kick Panel)

: GROUND POINTS

Code	See Page	Ground Points Location
ID	42	Cowl Side Panel LH
IE		
IG	42	Cowl Side Panel RH
IH	42	Right Kick Panel

: SPLICE POINTS

Code	See Page	Wire Harness with Splice Points	Code	See Page	Wire Harness with Splice Points
E5	40	Engine Room Main Wire	I3	44	Cowl Wire
I1	44				

REAR WINDOW DEFOGGER

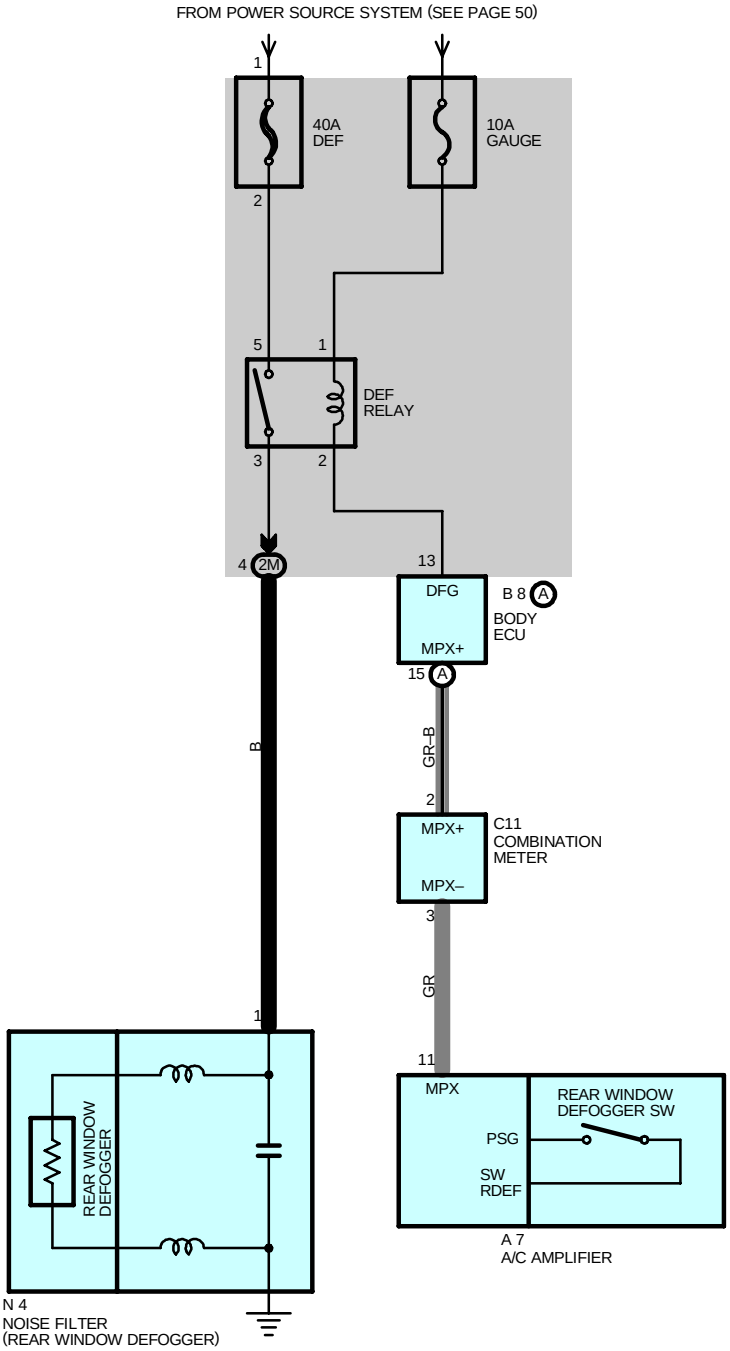

SERVICE HINTS

DEF RELAY

5–3 : Closed with the ignition SW on and the rear window defogger SW on

: PARTS LOCATION

Code		See Page	Code	See Page	Code	See Page
A7		36	C11	36		
B8	A	36	N4	39		

: JUNCTION BLOCK AND WIRE HARNESS CONNECTOR

Code	See Page	Junction Block and Wire Harness (Connector Location)
2M	31	Floor Wire and Instrument Panel J/B (Cowl Side Panel LH)

COMBINATION METER

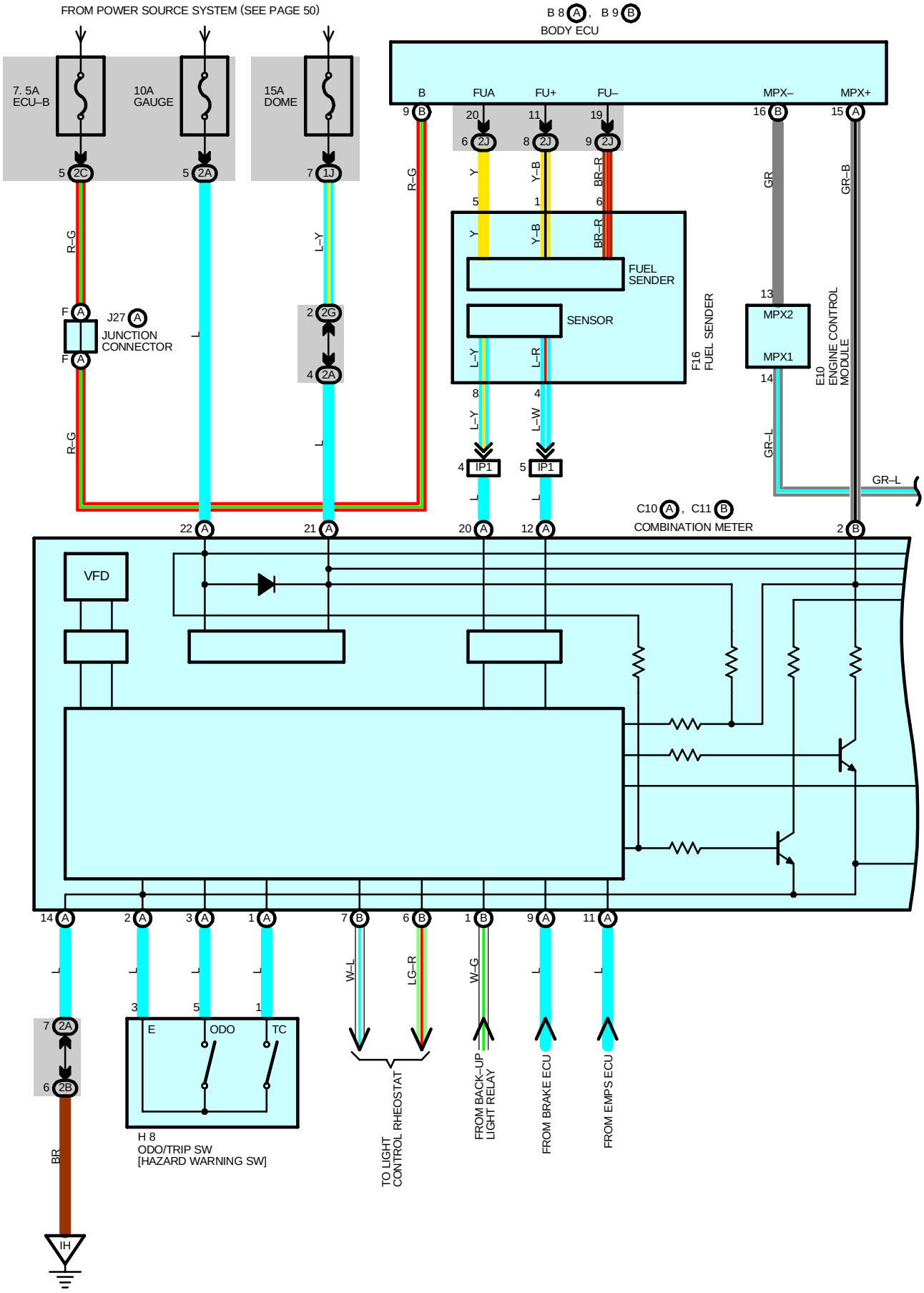

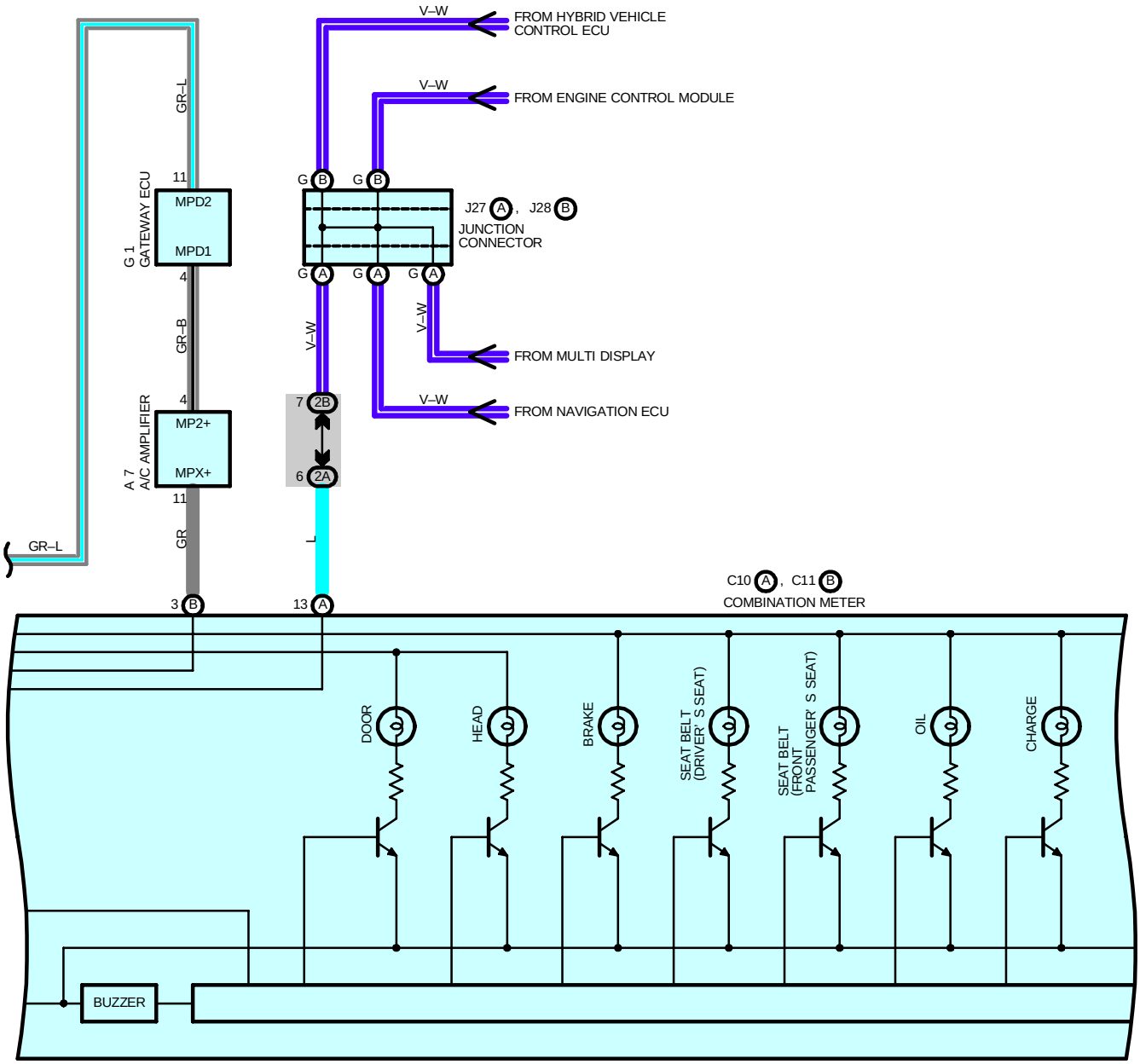
V–W
FROM HYBRID VEHICLE CONTROL ECU
V–W
FROM ENGINE CONTROL MODULE
GR–L
11
MPD2
MPD1
G 1
GATEWAY ECU
4
GR–B
4
MP2+
MPX+
A 7
A/C AMPLIFIER
11
GR
3 B
GR–L
G B
G B
J27 A , J28 B
JUNCTION CONNECTOR
G A
G A
G A
V–W
V–W
FROM MULTI DISPLAY
7 2B
6 2A
V–W
FROM NAVIGATION ECU
L
13 A
C10 A , C11 B
COMBINATION METER
DOOR
HEAD
BRAKE
SEAT BELT (DRIVER' S SEAT)
SEAT BELT (FRONT PASSENGER' S SEAT)
OIL
CHARGE
BUZZER

COMBINATION METER

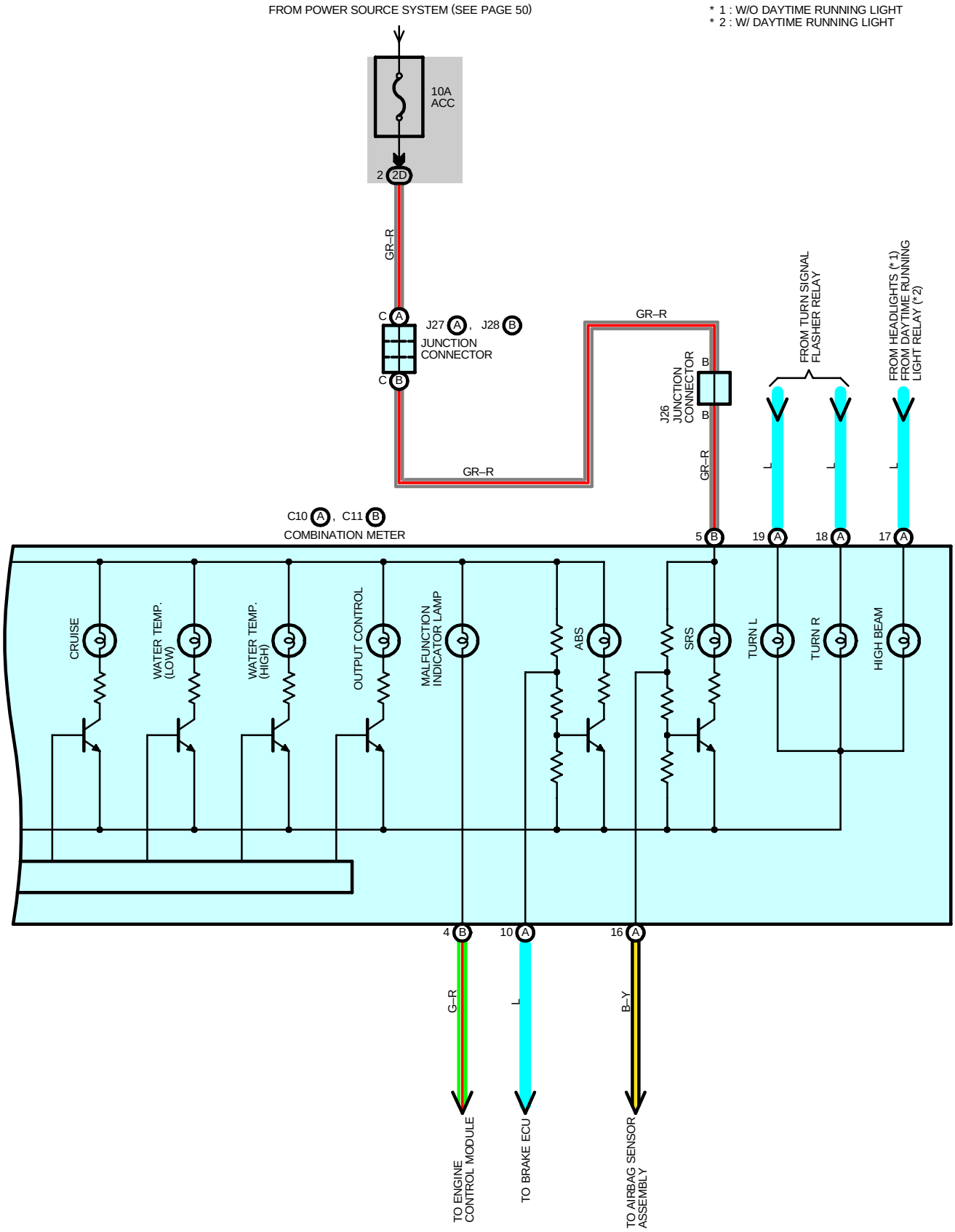

SERVICE HINTS

C10 (A), C11 (B) COMBINATION METER

(A)22–GROUND : Approx. **12** volts with the ignition SW at **ON** position
(B) 5–GROUND : Approx. **12** volts with the ignition SW at **ON** or **ACC** position
(A)21–GROUND : Always approx. **12** volts
(A)14–GROUND : Always continuity

: PARTS LOCATION

Code		See Page	Code		See Page	Code		See Page
A7		36	C11	B	36	H8		37
B8	A	36	E10		36	J26		37
B9	B	36	F16		38	J27	A	37
C10	A	36	G1		37	J28	B	37

: JUNCTION BLOCK AND WIRE HARNESS CONNECTOR

Code	See Page	Junction Block and Wire Harness (Connector Location)
1J	27	Engine Room Main Wire and Engine Room J/B (Engine Compartment Left)
2A	30	Instrument Panel Wire and Instrument Panel J/B (Cowl Side Panel LH)
2B		
2C		
2D		
2G	31	Engine Room Main Wire and Instrument Panel J/B (Cowl Side Panel LH)
2J	31	Cowl Wire and Instrument Panel J/B (Cowl Side Panel LH)

: CONNECTOR JOINING WIRE HARNESS AND WIRE HARNESS

Code	See Page	Joining Wire Harness and Wire Harness (Connector Location)
IP1	44	Instrument Panel Wire and Cowl Wire (Right Kick Panel)

: GROUND POINTS

Code	See Page	Ground Points Location
IH	42	Right Kick Panel

RADIATOR FAN AND CONDENSER FAN

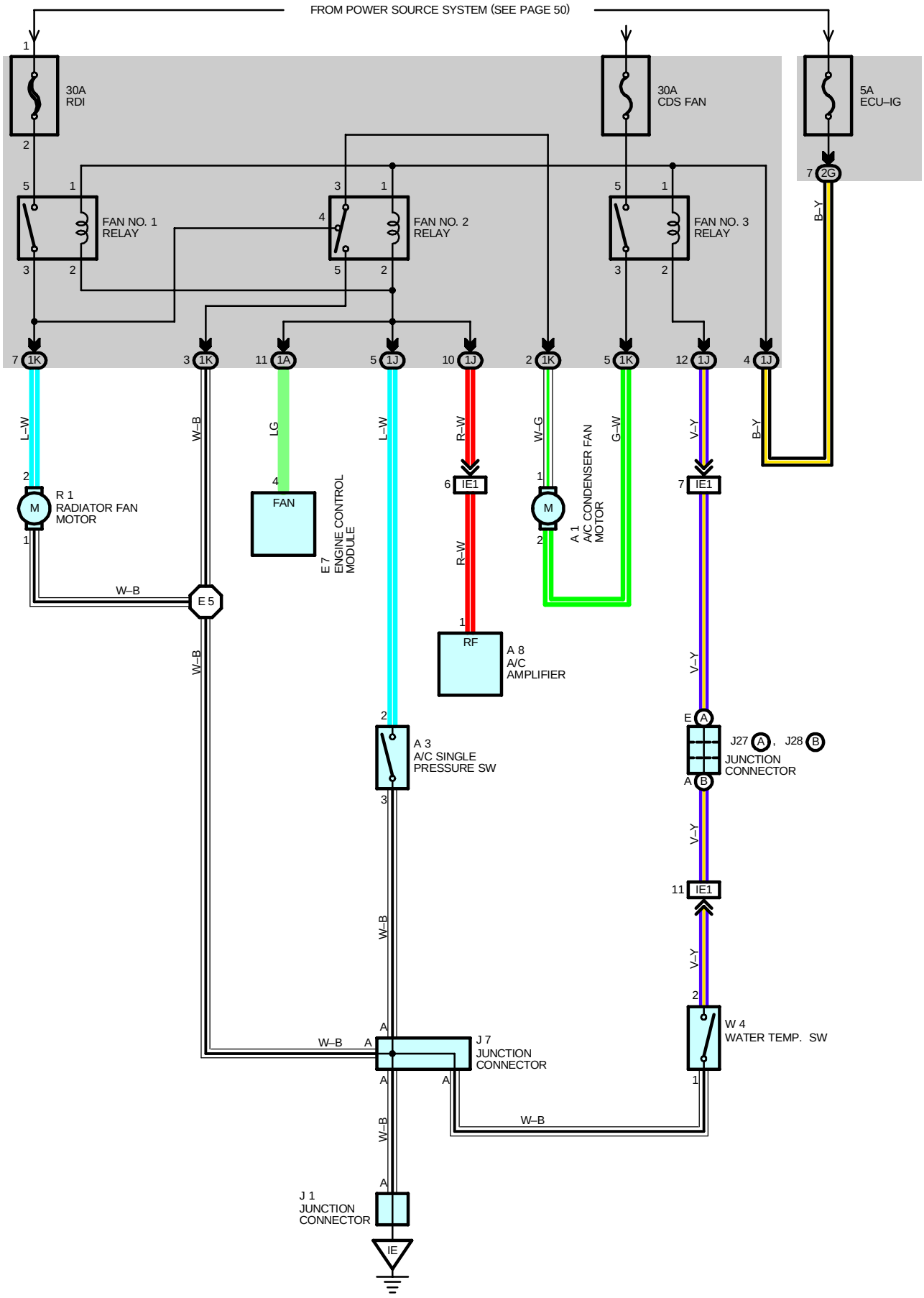

SYSTEM OUTLINE

The radiator fan motor and A/C condenser fan motor operates according to the water temp. SW (Inverter), A/C single pressure SW, and the A/C system condition. The FAN NO.1 relay, FAN NO.2 relay, FAN NO.3 relay are turned on/off, to operate the fan motors at low speed (In series), or high speed (In parallel).

1. LOW SPEED OPERATION

When the water temp. SW (Inverter) is on, the radiator fan motor and A/C condenser fan motor operates at low speed.

2. HIGH SPEED OPERATION

When the water temp. SW (Inverter) is on, if the A/C system is operating A/C single pressure SW is on, the radiator fan motor and A/C condenser fan motor operates at high speed.

SERVICE HINTS

A3 A/C SINGLE PRESSURE SW

3–2 : Close above approx. **1520** kpa (**15.5** kgf/cm^2, **220** psi)
Open below approx. **1230** kpa (**12.5** kgf/cm^2, **178** psi)

: PARTS LOCATION

Code	See Page	Code		See Page	Code	See Page
A1	34	J1		37	R1	35
A3	34	J7		37	W4	35
A8	36	J27	A	37		
E7	36	J28	B	37		

: JUNCTION BLOCK AND WIRE HARNESS CONNECTOR

Code	See Page	Junction Block and Wire Harness (Connector Location)
1A	27	Engine Wire and Engine Room J/B (Engine Compartment Left)
1J	27	Engine Room Main Wire and Engine Room J/B (Engine Compartment Left)
1K		
2G	31	Engine Room Main Wire and Instrument Panel J/B (Cowl Side Panel LH)

: CONNECTOR JOINING WIRE HARNESS AND WIRE HARNESS

Code	See Page	Joining Wire Harness and Wire Harness (Connector Location)
IE1	42	Instrument Panel Wire and Engine Room Main Wire (Left Kick Panel)

: GROUND POINTS

Code	See Page	Ground Points Location
IE	42	Cowl Side Panel LH

: SPLICE POINTS

Code	See Page	Wire Harness with Splice Points	Code	See Page	Wire Harness with Splice Points
E5	40	Engine Room Main Wire			

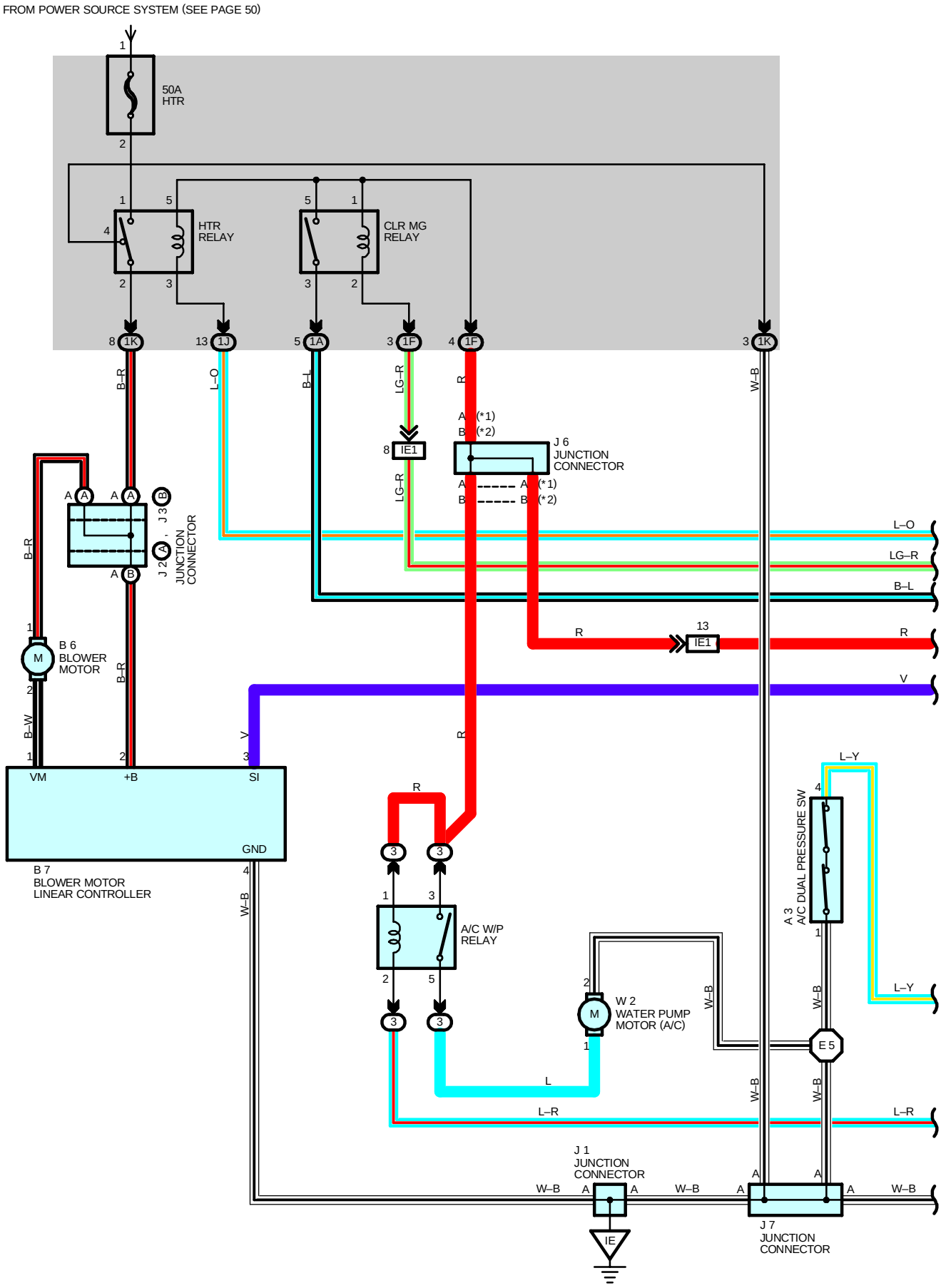
FROM POWER SOURCE SYSTEM (SEE PAGE 50)
50A HTR
HTR RELAY
CLR MG RELAY
8 1K
13 1J
5 1A
3 1F
4 1F
3 1K
B–R
L–O
B–L
LG–R
R
W–B
A (*1)
B (*2)
8 IE1
J 6 JUNCTION CONNECTOR
J 2 , J 3 JUNCTION CONNECTOR
L–O
LG–R
B–L
R
13 IE1
R
V
B 6 BLOWER MOTOR
B–W
VM
+B
SI
GND
B 7 BLOWER MOTOR LINEAR CONTROLLER
A/C W/P RELAY
W 2 WATER PUMP MOTOR (A/C)
L
L–R
L–Y
A 3 A/C DUAL PRESSURE SW
E 5
W–B
J 1 JUNCTION CONNECTOR
IE
J 7 JUNCTION CONNECTOR

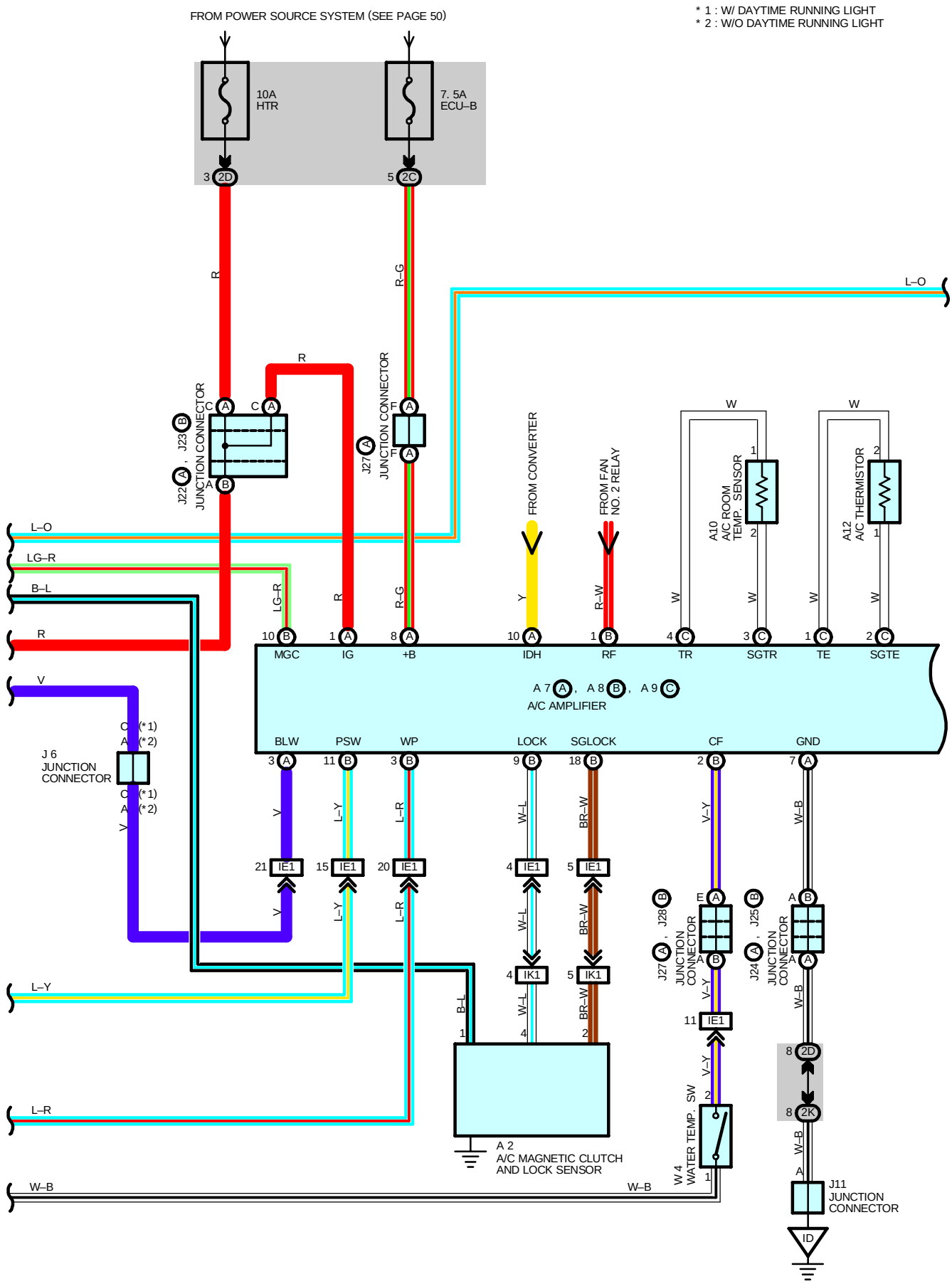
FROM POWER SOURCE SYSTEM (SEE PAGE 50)
* 1 : W/ DAYTIME RUNNING LIGHT
* 2 : W/O DAYTIME RUNNING LIGHT
10A HTR
7. 5A ECU–B
3 2D
5 2C
R
R–G
L–O
J23 , J22 JUNCTION CONNECTOR
J27 JUNCTION CONNECTOR
FROM CONVERTER
FROM FAN NO. 2 RELAY
A10 A/C ROOM TEMP. SENSOR
A12 A/C THERMISTOR
W
LG–R
B–L
Y
R–W
10 MGC
1 IG
8 +B
10 IDH
1 RF
4 TR
3 SGTR
1 TE
2 SGTE
A 7 , A 8 , A 9
A/C AMPLIFIER
V
J 6 JUNCTION CONNECTOR
BLW
PSW
WP
LOCK
SGLOCK
CF
GND
L–Y
L–R
W–L
BR–W
V–Y
W–B
B–L
21 IE1
15 IE1
20 IE1
4 IE1
5 IE1
11 IE1
4 IK1
5 IK1
J28 , J27 JUNCTION CONNECTOR
J25 , J24 JUNCTION CONNECTOR
W 4 WATER TEMP. SW
8 2D
8 2K
J11 JUNCTION CONNECTOR
ID
A 2 A/C MAGNETIC CLUTCH AND LOCK SENSOR
W–B

AIR CONDITIONING

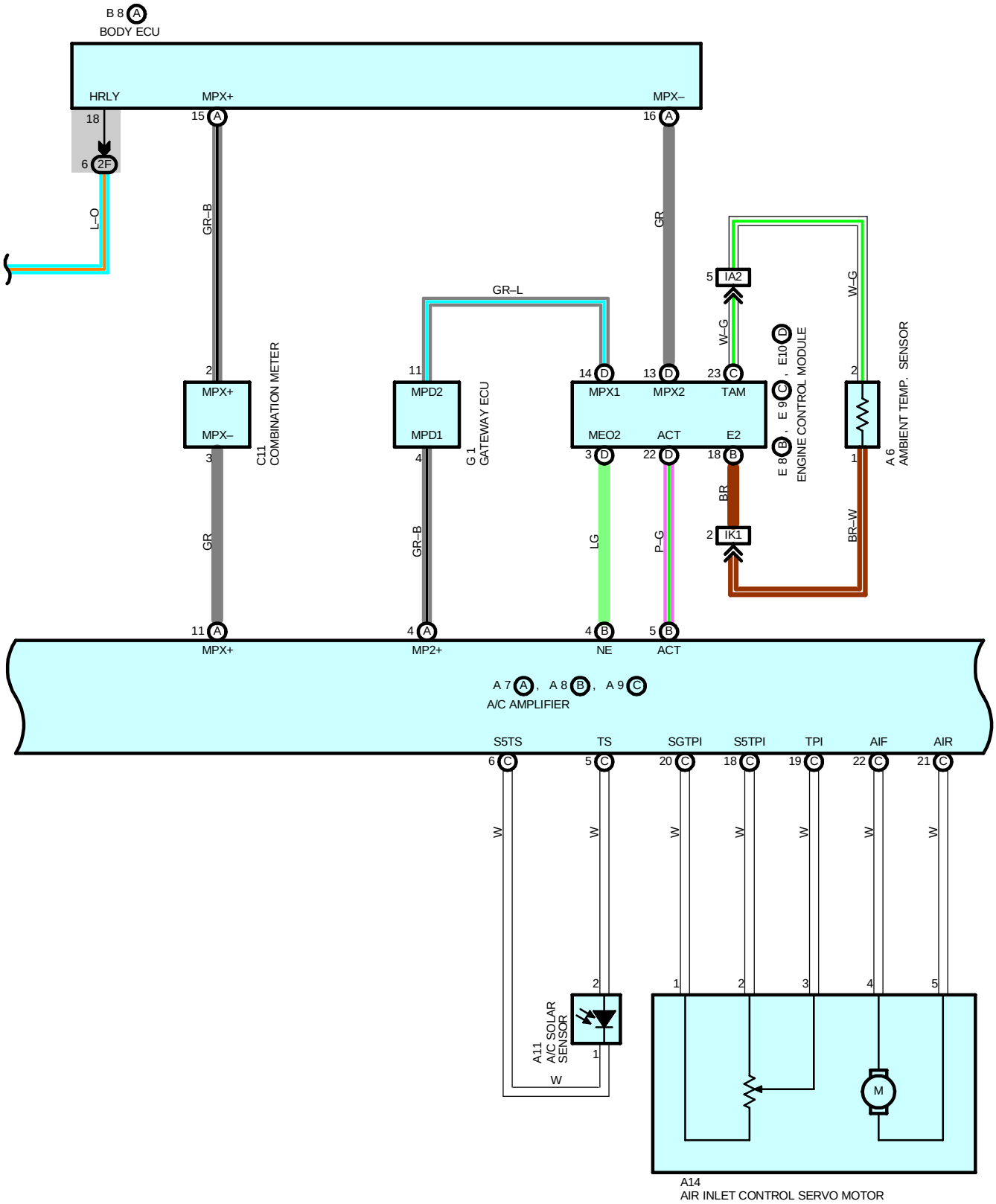

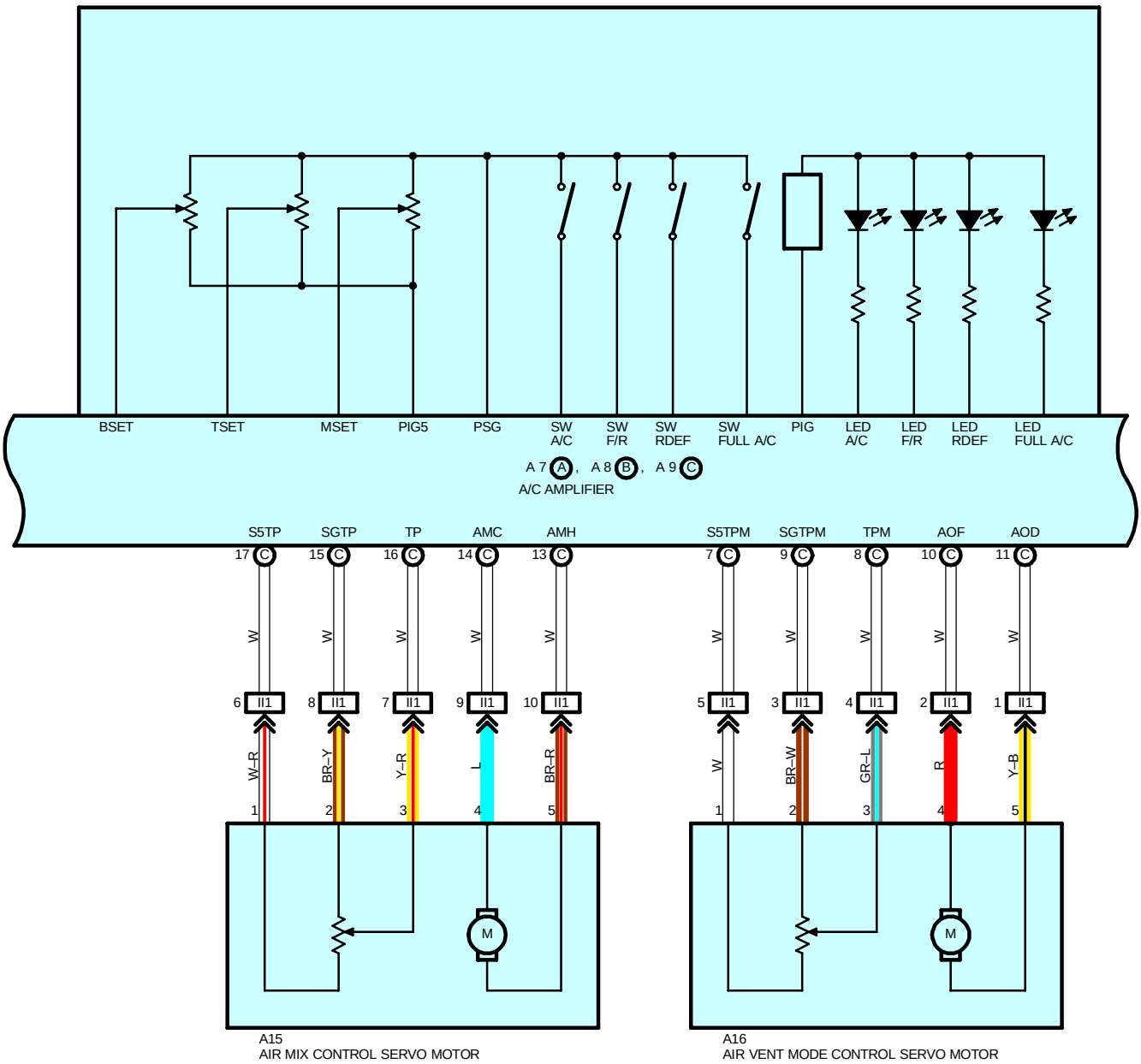

A15
AIR MIX CONTROL SERVO MOTOR

A16
AIR VENT MODE CONTROL SERVO MOTOR

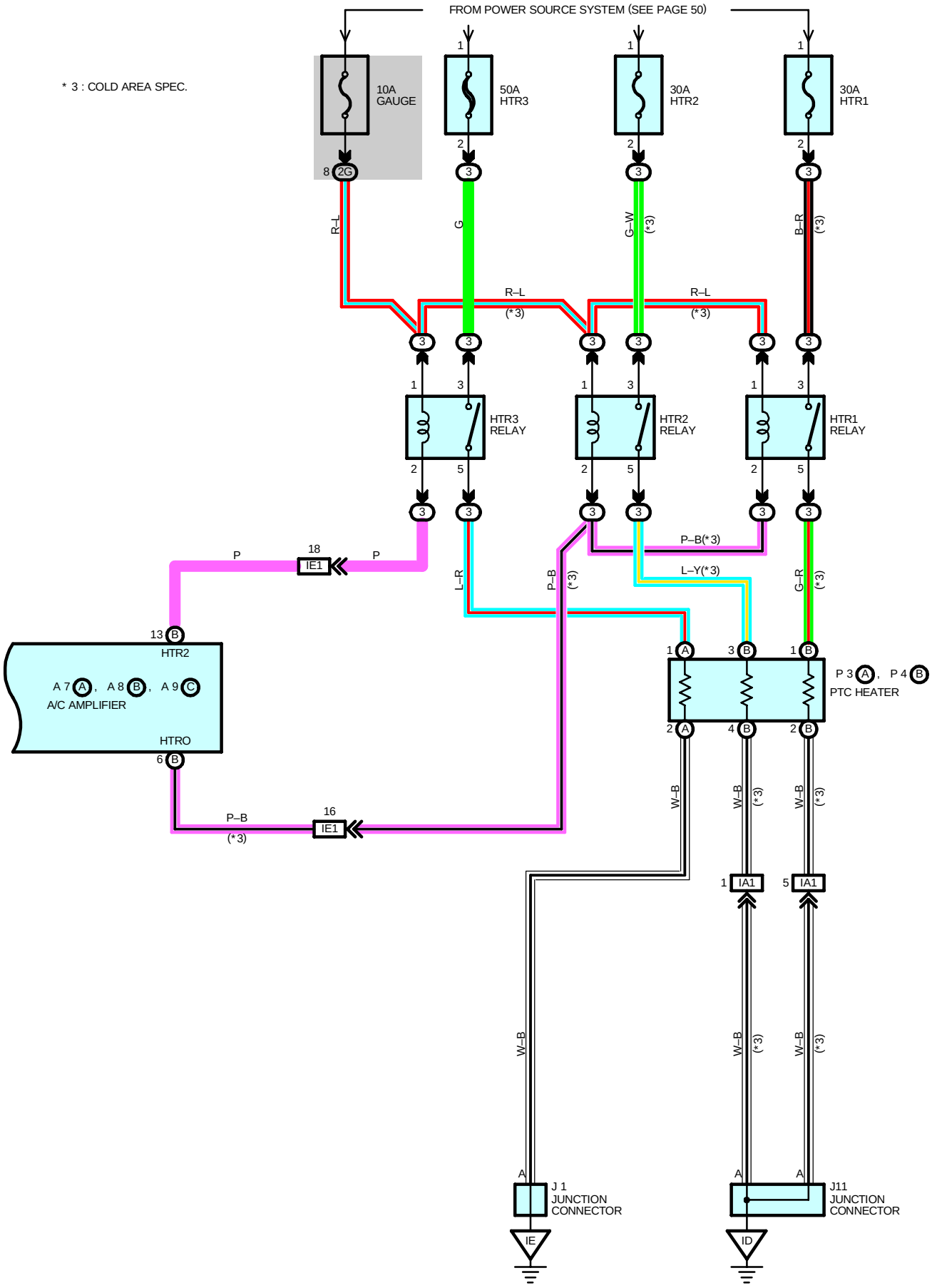
* 3 : COLD AREA SPEC.
FROM POWER SOURCE SYSTEM (SEE PAGE 50)
10A GAUGE
50A HTR3
30A HTR2
30A HTR1
8 2G
R–L
G
G–W (*3)
B–R (*3)
R–L (*3)
R–L (*3)
HTR3 RELAY
HTR2 RELAY
HTR1 RELAY
P
18 IE1
P
L–R
P–B (*3)
P–B(*3)
L–Y(*3)
G–R (*3)
13 B
HTR2
A 7 A , A 8 B , A 9 C
A/C AMPLIFIER
HTRO
6 B
P–B (*3)
16 IE1
P 3 A , P 4 B
PTC HEATER
W–B
W–B (*3)
W–B (*3)
1 IA1
5 IA1
W–B
W–B (*3)
W–B (*3)
J 1 JUNCTION CONNECTOR
J11 JUNCTION CONNECTOR
IE
ID

SERVICE HINTS

A3 A/C DUAL PRESSURE SW

1–4 : Open with the refrigerant pressure at less than approx. **196** kpa (**2.0** kgf/cm^2, **28.4** psi), or more than approx. **3140** kpa (**32** kgf/cm^2, **455** psi),

A7 (A), A8 (B), A9 (C) A/C AMPLIFIER

(A) 8–GROUND : Always approx. **12** volts
(A) 1–GROUND : Approx. **12** volts with the ignition SW at **ON** position
(A) 7–GROUND : Always continuity

: PARTS LOCATION

Code	See Page	Code	See Page	Code	See Page
A2	34	B6	36	J7	37
A3	34	B7	36	J11	37
A6	34	B8 A	36	J22 A	37
A7 A	36	C11	36	J23 B	37
A8 B	36	E8 B	36	J24 A	37
A9 C	36	E9 C	36	J25 B	37
A10	36	E10 D	36	J27 A	37
A11	36	G1	37	J28 B	37
A12	36	J1	37	P3 A	37
A14	36	J2 A	37	P4 B	37
A15	36	J3 B	37	W2	35
A16	36	J6	37	W4	35

: RELAY BLOCKS

Code	See Page	Relay Blocks (Relay Block Location)
3	24	Engine Room R/B No.3 (Engine Compartment Right)

: JUNCTION BLOCK AND WIRE HARNESS CONNECTOR

Code	See Page	Junction Block and Wire Harness (Connector Location)
1A	27	Engine Wire and Engine Room J/B (Engine Compartment Left)
1F	27	Engine Room Main Wire and Engine Room J/B (Engine Compartment Left)
1J		
1K		
2C	30	Instrument Panel Wire and Instrument Panel J/B (Cowl Side Panel LH)
2D		
2F	31	Engine Room Main Wire and Instrument Panel J/B (Cowl Side Panel LH)
2G		
2K	31	Cowl Wire and Instrument Panel J/B (Cowl Side Panel LH)

: CONNECTOR JOINING WIRE HARNESS AND WIRE HARNESS

Code	See Page	Joining Wire Harness and Wire Harness (Connector Location)
IA1	42	Engine Room Main Wire and Cowl Wire (Cowl Side Panel LH)
IA2		
IE1	42	Instrument Panel Wire and Engine Room Main Wire (Left Kick Panel)
II1	44	Instrument Panel Wire and A/C Sub Wire (Instrument Panel Brace LH)
IK1	44	Engine Wire and Engine Room Main Wire (Right Kick Panel)

: GROUND POINTS

Code	See Page	Ground Points Location
ID	42	Cowl Side Panel LH
IE		



: SPLICE POINTS

Code	See Page	Wire Harness with Splice Points	Code	See Page	Wire Harness with Splice Points
E5	40	Engine Room Main Wire			

I GROUND POINT

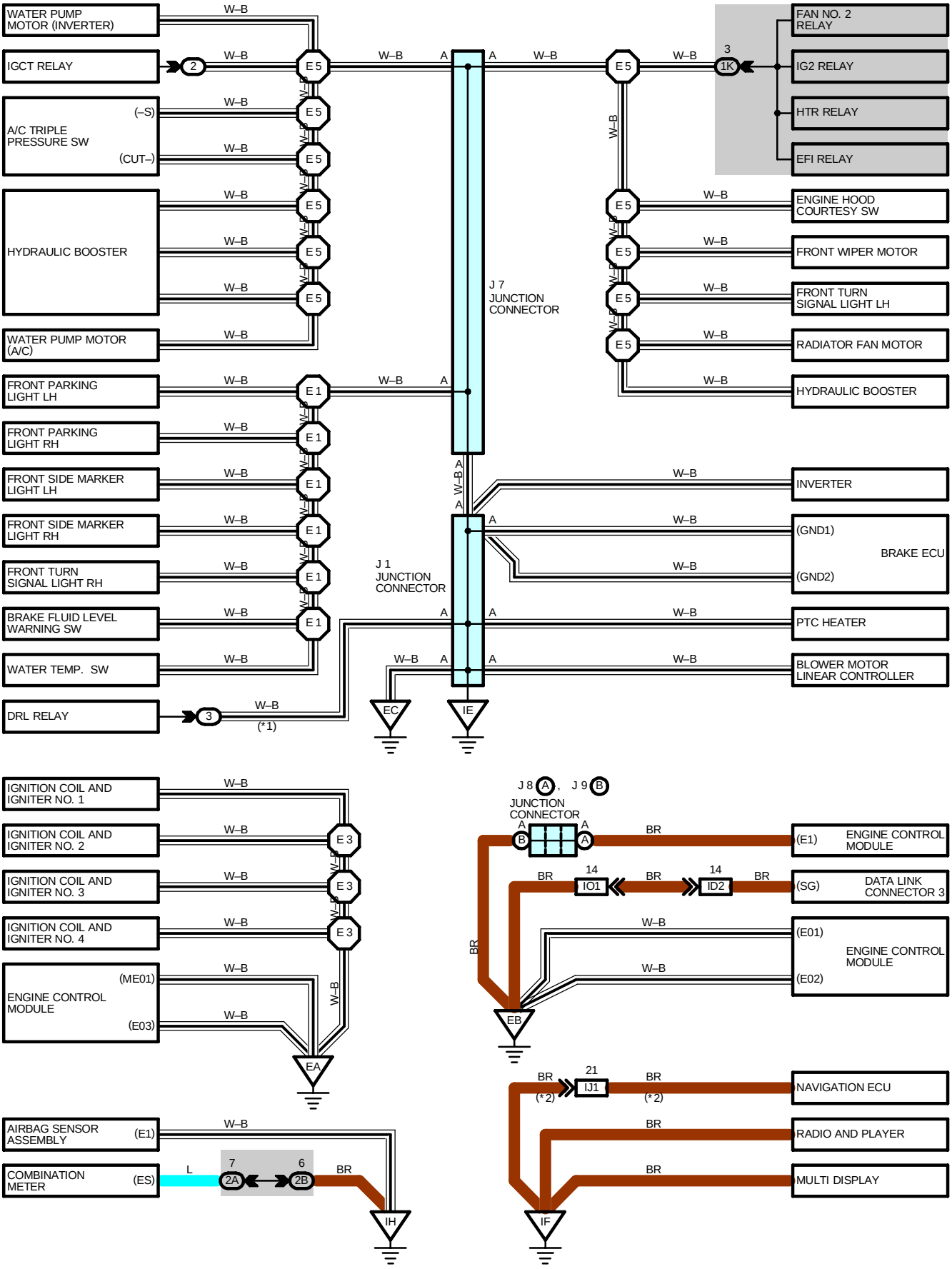

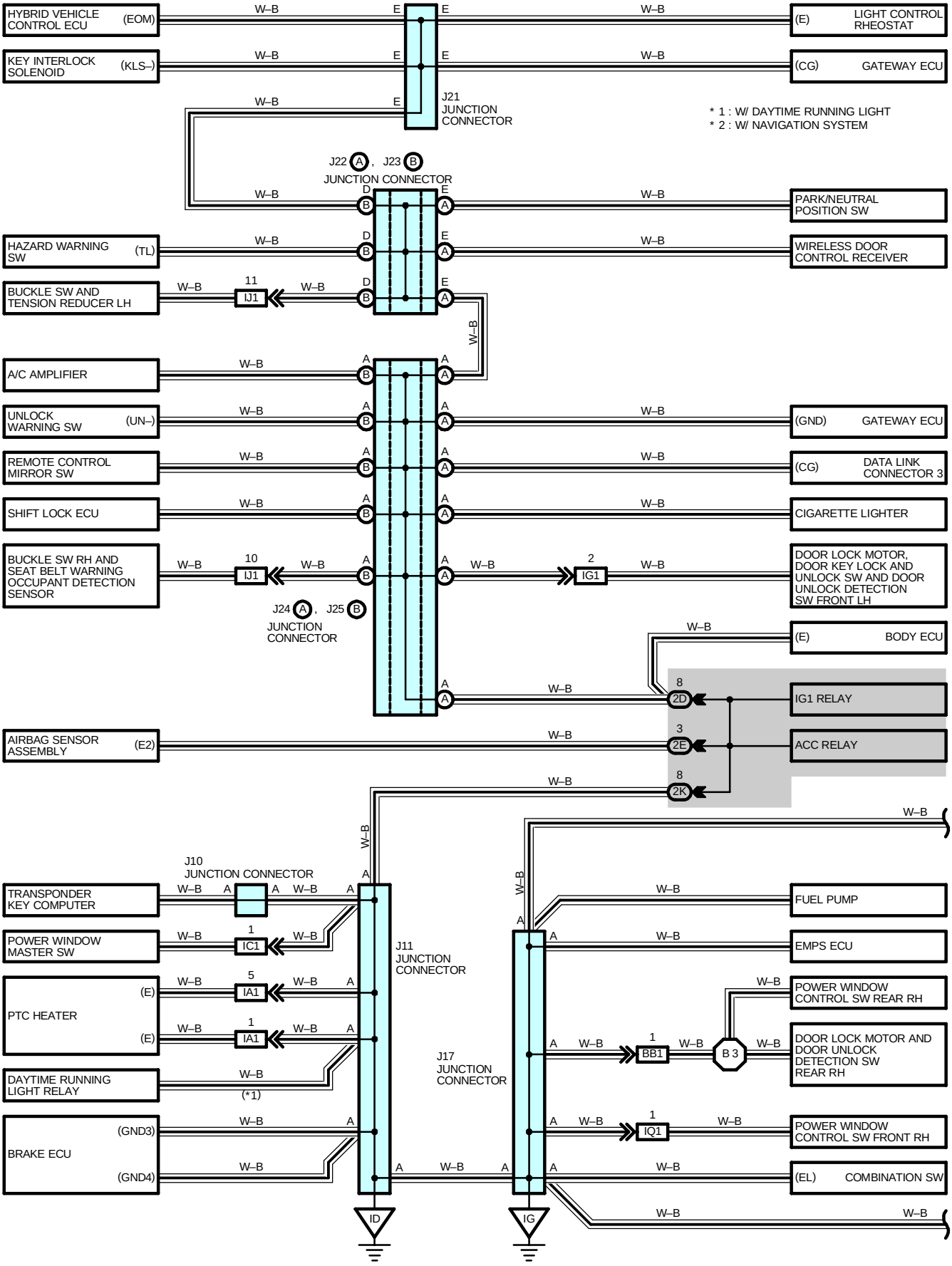
HYBRID VEHICLE CONTROL ECU (EOM)
KEY INTERLOCK SOLENOID (KLS–)
J21 JUNCTION CONNECTOR
* 1 : W/ DAYTIME RUNNING LIGHT
* 2 : W/ NAVIGATION SYSTEM
(E) LIGHT CONTROL RHEOSTAT
(CG) GATEWAY ECU
J22 A , J23 B JUNCTION CONNECTOR
PARK/NEUTRAL POSITION SW
HAZARD WARNING SW (TL)
WIRELESS DOOR CONTROL RECEIVER
BUCKLE SW AND TENSION REDUCER LH
IJ1
A/C AMPLIFIER
UNLOCK WARNING SW (UN–)
(GND) GATEWAY ECU
REMOTE CONTROL MIRROR SW
(CG) DATA LINK CONNECTOR 3
SHIFT LOCK ECU
CIGARETTE LIGHTER
BUCKLE SW RH AND SEAT BELT WARNING OCCUPANT DETECTION SENSOR
IG1
DOOR LOCK MOTOR, DOOR KEY LOCK AND UNLOCK SW AND DOOR UNLOCK DETECTION SW FRONT LH
J24 A , J25 B JUNCTION CONNECTOR
(E) BODY ECU
IG1 RELAY
ACC RELAY
AIRBAG SENSOR ASSEMBLY (E2)
2D
2E
2K
J10 JUNCTION CONNECTOR
TRANSPONDER KEY COMPUTER
FUEL PUMP
POWER WINDOW MASTER SW
IC1
EMPS ECU
J11 JUNCTION CONNECTOR
PTC HEATER
(E)
IA1
POWER WINDOW CONTROL SW REAR RH
DAYTIME RUNNING LIGHT RELAY
(*1)
J17 JUNCTION CONNECTOR
BB1
B 3
DOOR LOCK MOTOR AND DOOR UNLOCK DETECTION SW REAR RH
BRAKE ECU
(GND3)
(GND4)
IQ1
POWER WINDOW CONTROL SW FRONT RH
(EL) COMBINATION SW
ID
IG

I GROUND POINT

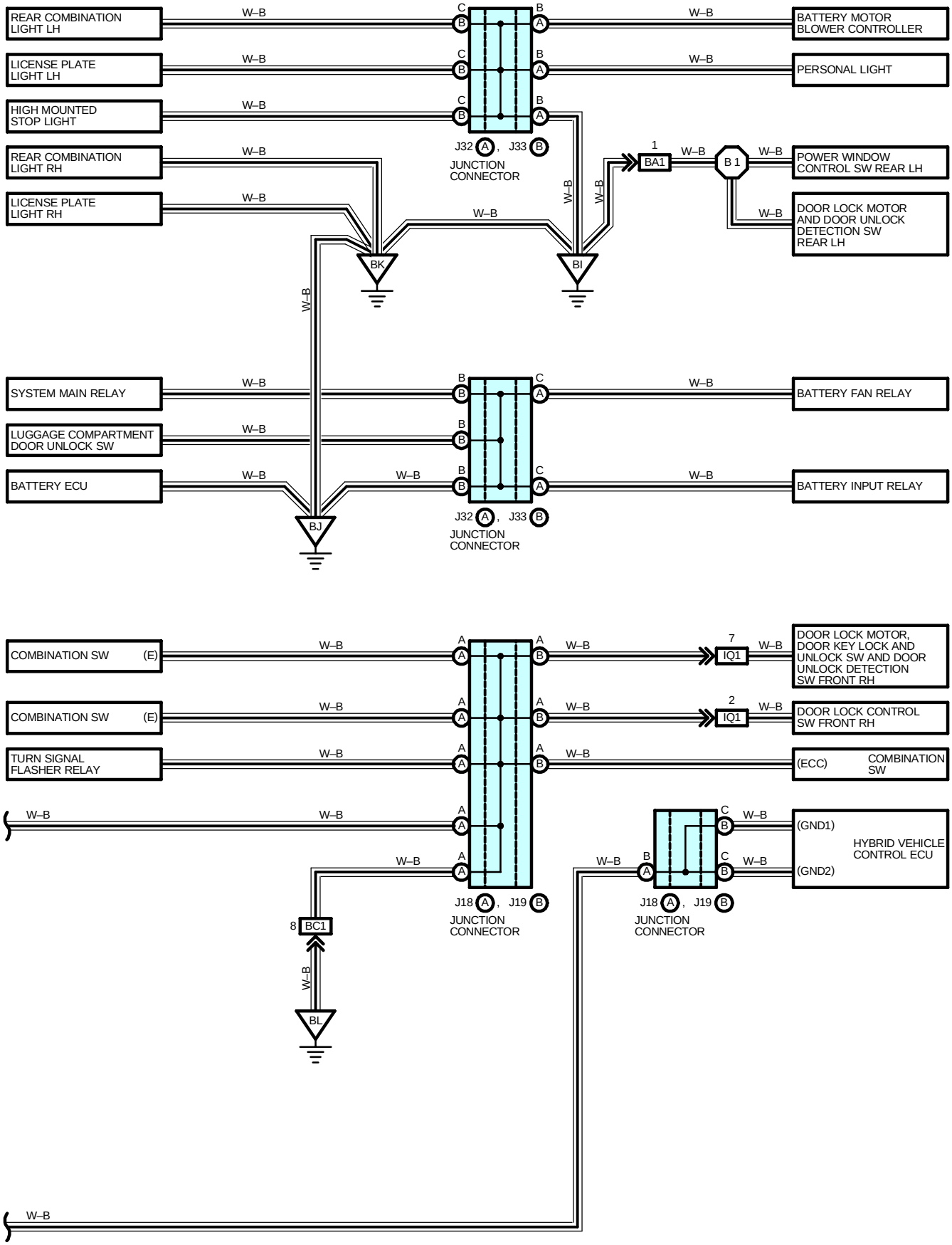

: PARTS LOCATION

Code	See Page	Code	See Page	Code	See Page
J1	37	J17	37	J24 A	37
J7	37	J18 A	37	J25 B	37
J8 A	37	J19 B	37	J32 A	38
J9 B	37	J21	37	J33 B	38
J10	37	J22 A	37		
J11	37	J23 B	37		

: RELAY BLOCKS

Code	See Page	Relay Blocks (Relay Block Location)
2	23	Engine Room R/B No.2 (Right Side of Reserve Tank)
3	24	Engine Room R/B No.3 (Engine Compartment Right)

: JUNCTION BLOCK AND WIRE HARNESS CONNECTOR

Code	See Page	Junction Block and Wire Harness (Connector Location)
1K	27	Engine Room Main Wire and Engine Room J/B (Engine Compartment Left)
2A	30	Instrument Panel Wire and Instrument Panel J/B (Cowl Side Panel LH)
2B		
2D		
2E		
2K	31	Cowl Wire and Instrument Panel J/B (Cowl Side Panel LH)

: CONNECTOR JOINING WIRE HARNESS AND WIRE HARNESS

Code	See Page	Joining Wire Harness and Wire Harness (Connector Location)
IA1	42	Engine Room Main Wire and Cowl Wire (Cowl Side Panel LH)
IC1	42	Front Door LH Wire and Cowl Wire (Left Kick Panel)
ID2	42	Instrument Panel Wire and Cowl Wire (Left Kick Panel)
IG1	42	Front Door LH Wire and Instrument Panel Wire (Left Kick Panel)
IJ1	44	Floor No.3 Wire and Instrument Panel Wire (Under the Instrument Panel Center)
IO1	44	Engine Wire and Cowl Wire (Right Kick Panel)
IQ1	44	Front Door RH Wire and Cowl Wire (Right Kick Panel)
BA1	46	Rear Door No.2 Wire and Floor Wire (Center Pillar LH)
BB1	46	Rear Door No.1 Wire and Cowl Wire (Center Pillar RH)
BC1	46	Cowl Wire and Fuel Tank Wire (Near the Fuel Tank)

: GROUND POINTS

Code	See Page	Ground Points Location
EA	40	Engine Block
EB		
EC	40	Engine Compartment Left
ID	42	Cowl Side Panel LH
IE		
IF	42	Left Kick Panel
IG	42	Cowl Side Panel RH
IH	42	Right Kick Panel
BI	46	Left Side of Rear Pillar
BJ	46	Right Side of Rear Pillar
BK	46	Back Panel Center
BL	46	Near the Fuel Tank

I GROUND POINT

 **: SPLICE POINTS**

Code	See Page	Wire Harness with Splice Points	Code	See Page	Wire Harness with Splice Points
E1	40	Engine Room Main Wire	B1	46	Rear Door No.2 Wire
E3	40	Engine Wire	B3	46	Rear Door No.1 Wire
E5	40	Engine Room Main Wire			

J POWER SOURCE (Current Flow Chart)

The chart below shows the route by which current flows from the battery to each electrical source (Fusible Link, Circuit Breaker, Fuse, etc.) and other Parts.

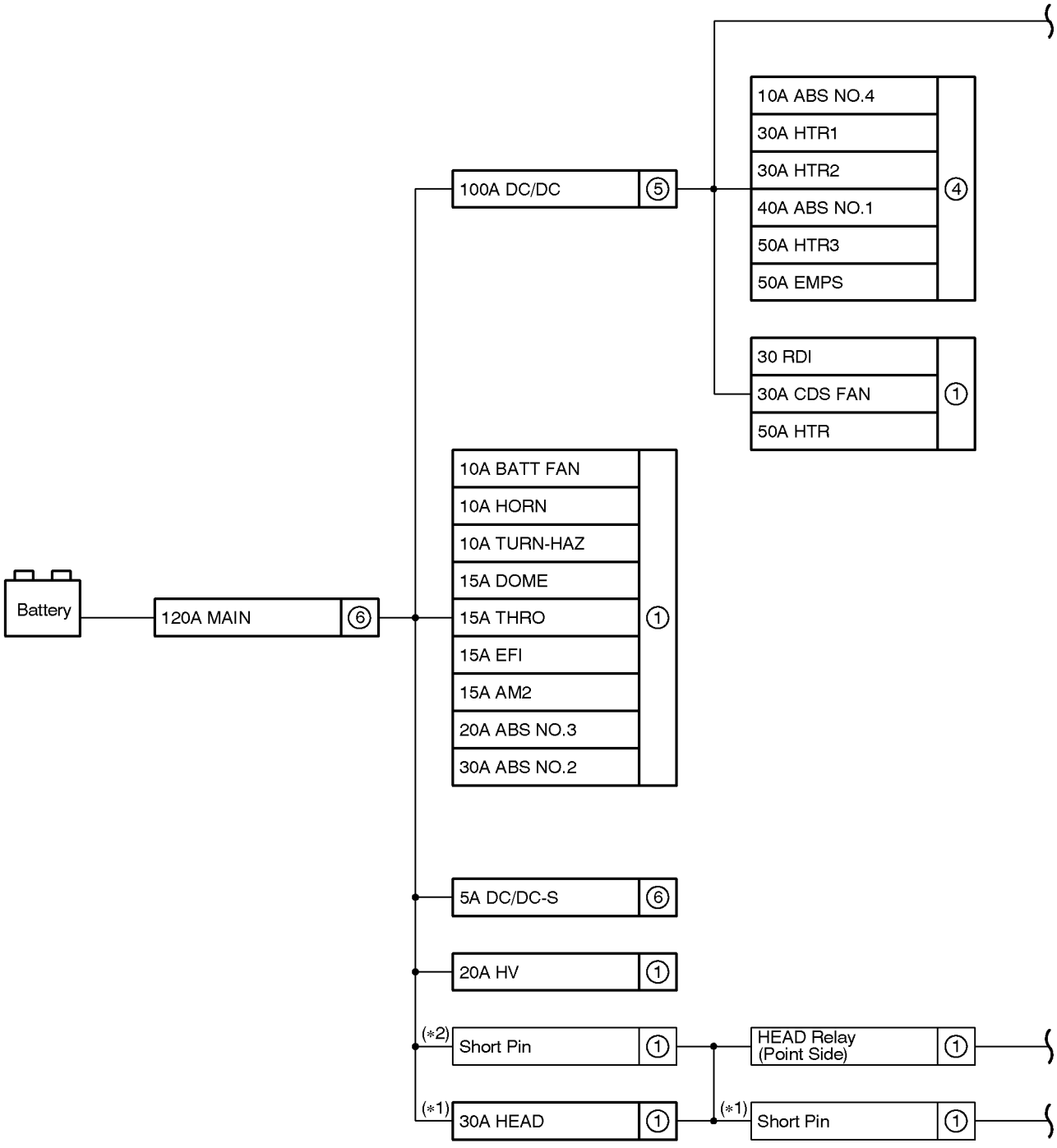

[LOCATION] ① : Engine Room J/B (See Page 26) ② : Instrument Panel J/B (See Page 30)
⑤ : Fusible Link Block No.1 (F10,F11,F12,F13 on See Page 22)

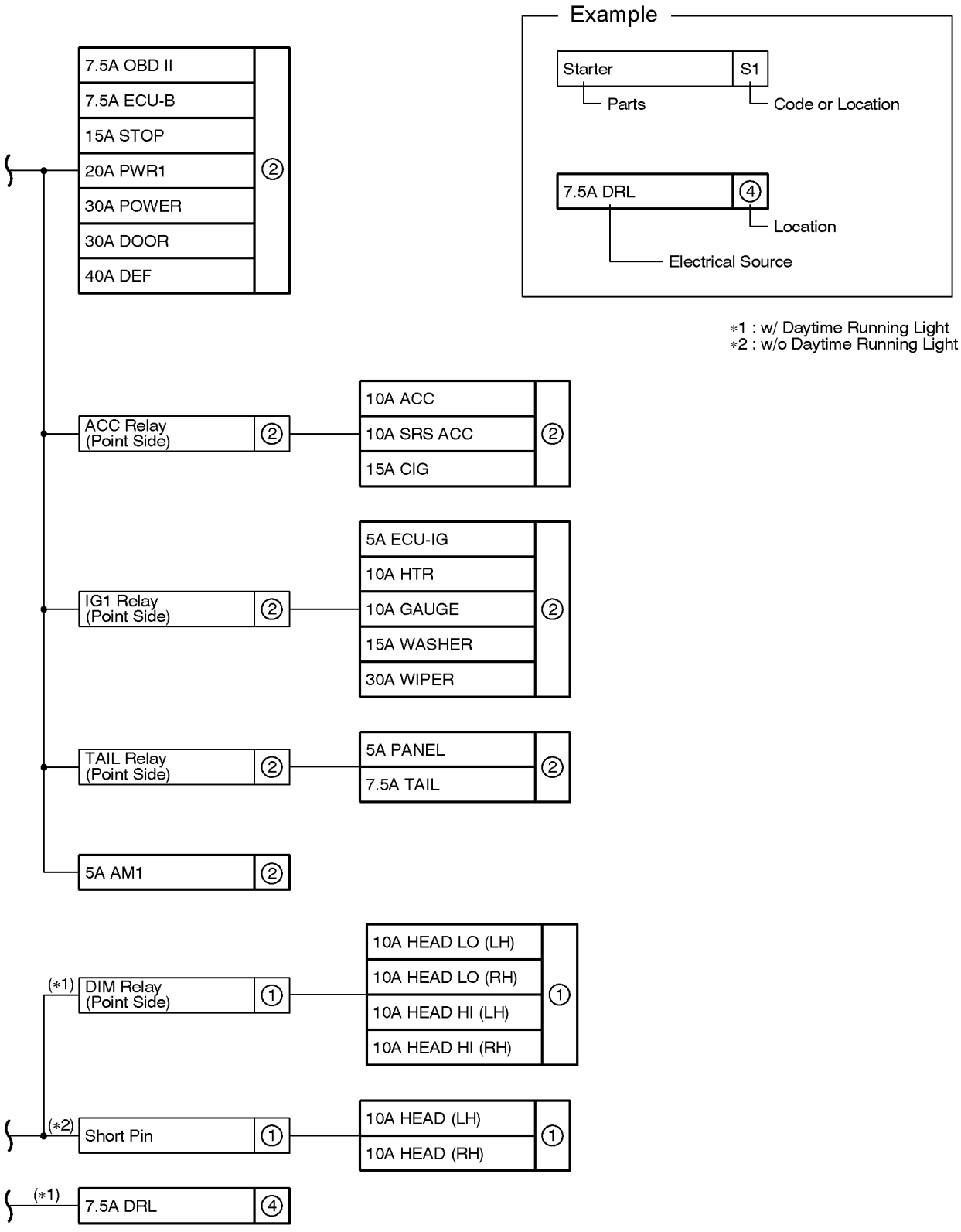

③ : Engine Room R/B No.2 (See Page 23) ④ : Engine Room R/B No.3 (See Page 24)

⑥ : Fusible Link Block No.2 (F17,F18 on See Page 23)

J POWER SOURCE (Current Flow Chart)

Fusible Link Block No.1 (See Page 22)

Fuse		System	Page
100A	DC/DC	Illumination	92
		Key Reminder and Light Reminder Buzzer	114
		Light Auto Turn Off	104
		Taillight	88
		TOYOTA Hybrid System	54

Fusible Link Block No.2 (See Page 23)

Fuse		System	Page
5A	DC/DC–S	TOYOTA Hybrid System	54
120A	MAIN	ABS	172
		Engine Control	68
		Headlight (w/o Daytime Running Light)	84
		Hybrid Vehicle Immobiliser System	78
		Illumination	92
		Key Reminder and Light Reminder Buzzer	114
		Light Auto Turn Off	104
		SRS	167
		Taillight	88
		TOYOTA Hybrid System	54

Engine Room R/B No.3 (See Page 24)

Fuse		System	Page
7.5A	DRL	Headlight (w/ Daytime Running Light)	80
10A	ABS NO.4	ABS	172
30A	HTR1	Air Conditioning	188
30A	HTR2	Air Conditioning	188
40A	ABS NO.1	ABS	172
50A	EMPS	EMPS	164
50A	HTR3	Air Conditioning	188

Engine Room J/B (See Page 26)

Fuse		System	Page
10A	BATT FAN	TOYOTA Hybrid System	54
10A	HEAD (LH)	Headlight (w/o Daytime Running Light)	84
10A	HEAD (RH)	Headlight (w/o Daytime Running Light)	84
10A	HEAD HI (LH)	Headlight (w/ Daytime Running Light)	80
10A	HEAD HI (RH)	Headlight (w/ Daytime Running Light)	80
10A	HEAD LO (LH)	Headlight (w/ Daytime Running Light)	80
10A	HEAD LO (RH)	Headlight (w/ Daytime Running Light)	80
10A	HORN	Horn	124
		Theft Deterrent	146
10A	TURN–HAZ	Turn Signal and Hazard Warning Light	96

* These are the page numbers of the first page on which the related system is shown.

Fuse		System	Page
15A	AM2	ABS	172
		Engine Control	68
		Hybrid Vehicle Immobiliser System	78
		SRS	167
		TOYOTA Hybrid System	54
15A	DOME	Combination Meter	182
		Door Lock Control	134
		Headlight (w/ Daytime Running Light)	80
		Headlight (w/o Daytime Running Light)	84
		Illumination	92
		Interior Light	108
		Key Reminder and Light Reminder Buzzer	114
		Navigation System	156
		Power Window	126
		Radio and Player	152
		Seat Belt Warning	118
		Theft Deterrent	146
		TOYOTA Hybrid System	54
		Wireless Door Lock Control	140
15A	EFI	Engine Control	68
15A	THRO	Engine Control	68
20A	ABS NO.3	ABS	172
20A	HV	TOYOTA Hybrid System	54
30A	ABS NO.2	ABS	172
30A	CDS FAN	Radiator Fan and Condenser Fan	186
30A	HEAD	Headlight (w/ Daytime Running Light)	80
		Key Reminder and Light Reminder Buzzer	114
		Light Auto Turn Off	104
30A	RDI	Radiator Fan and Condenser Fan	186
50A	HTR	Air Conditioning	188

Instrument Panel J/B (See Page 30)

Fuse		System	Page
5A	ECU–IG	ABS	172
		Electric Tension Reducer	162
		EMPS	164
		Gateway System	160
		Navigation System	156
		Radiator Fan and Condenser Fan	186
		Shift Lock	132
5A	PANEL	Illumination	92
7.5A	ECU–B	Air Conditioning	188
		Combination Meter	182

* These are the page numbers of the first page on which the related system is shown.

J POWER SOURCE (Current Flow Chart)

Fuse		System	Page
7.5A	ECU–B	Door Lock Control	134
		EMPS	164
		Gateway System	160
		Headlight (w/ Daytime Running Light)	80
		Hybrid Vehicle Immobiliser System	78
		Interior Light	108
		Key Reminder and Light Reminder Buzzer	114
		Light Auto Turn Off	104
		Power Window	126
		Theft Deterrent	146
		Wireless Door Lock Control	140
7.5A	OBDII	Engine Control	68
		Theft Deterrent	146
7.5A	TAIL	Key Reminder and Light Reminder Buzzer	114
		Light Auto Turn Off	104
		Taillight	88
10A	ACC	Combination Meter	182
		Gateway System	160
		Navigation System	156
		Radio and Player	152
		Remote Control Mirror	130
		Shift Lock	132
		SRS	167
10A	GAUGE	ABS	172
		Air Conditioning	188
		Back–Up Light	102
		Combination Meter	182
		Door Lock Control	134
		EMPS	164
		Engine Control	68
		Headlight (w/ Daytime Running Light)	80
		Key Reminder and Light Reminder Buzzer	114
		Light Auto Turn Off	104
		Navigation System	156
		Power Window	126
		Rear Window Defogger	180
		Seat Belt Warning	118
		Theft Deterrent	146
		TOYOTA Hybrid System	54
		Turn Signal and Hazard Warning Light	96
		Wireless Door Lock Control	140
10A	HTR	Air Conditioning	188
10A	SRS ACC	SRS	167

* These are the page numbers of the first page on which the related system is shown.

Fuse		System	Page
15A	CIG	Cigarette Lighter	122
15A	STOP	ABS Engine Control Shift Lock Stop Light	172 68 132 100
15A	WASHER	Wiper and Washer	120
20A	PWR1	Power Window	126
30A	DOOR	Door Lock Control Theft Deterrent Wireless Door Lock Control	134 146 140
30A	POWER	Power Window	126
30A	WIPER	Wiper and Washer	120
40A	DEF	Rear Window Defogger	180

* These are the page numbers of the first page on which the related system is shown.

K CONNECTOR LIST

A1
BLACK



A2
GRAY



A3
BLACK

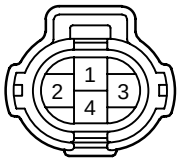

A4
GRAY



A5
GRAY



A6
BLACK



A7

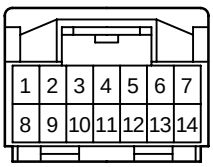

A8

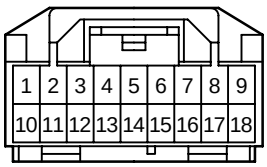

A9

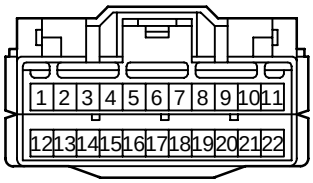

A10

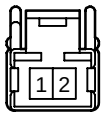

A11



A12



A13
BLACK



A14

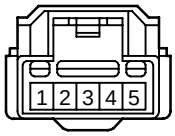

A15
BLACK

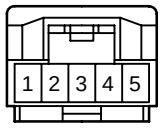

A16

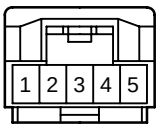

A17
YELLOW

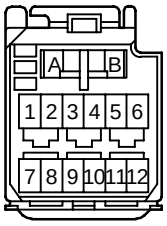

A18
YELLOW

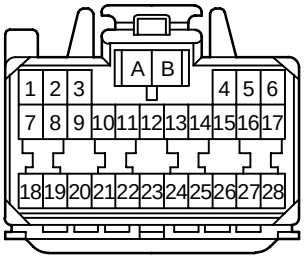

A19
YELLOW

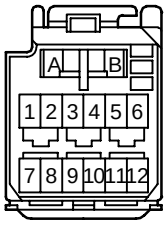

A20
YELLOW

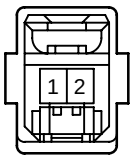

A21
YELLOW

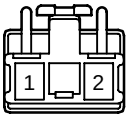

A22
BLACK



A23

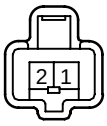

A24



B1
GRAY



B2
BLACK



B3
BLACK

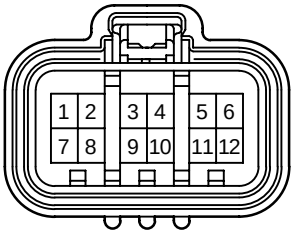

B4
GRAY



B5
BROWN

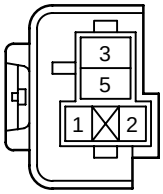

B6

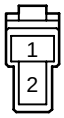

B7
BLACK

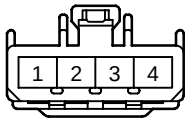

B8

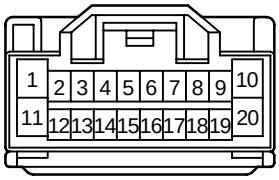

B9

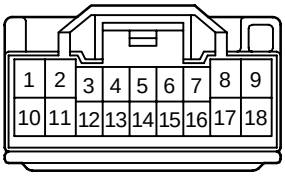

B10

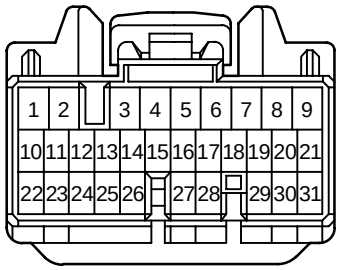

B11
BLACK

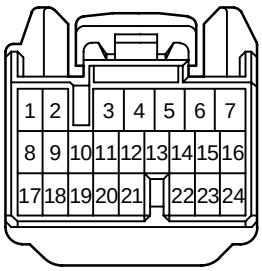

B12

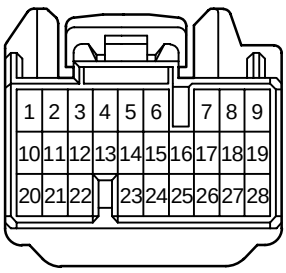

B13
BLACK

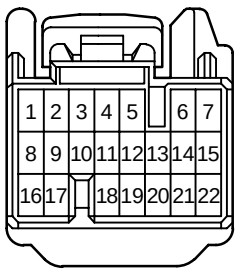

B14
BLACK

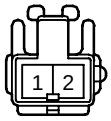

B15
BLACK

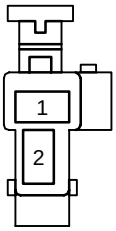

B16

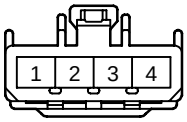

B17

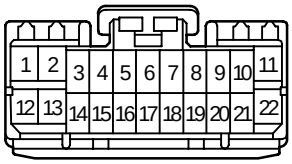

B18

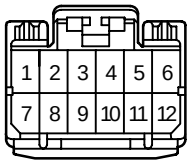

B19
BROWN

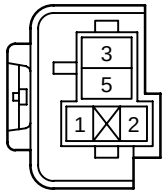

B20



B21

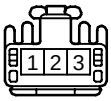

B22
BLACK

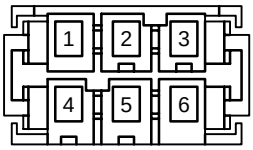

C1
BLACK



C2
BLACK



C3
YELLOW

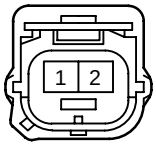

C4
GRAY



C5
GRAY

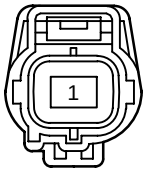

C6
BLACK

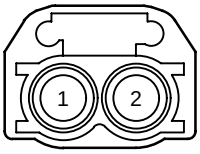

C7

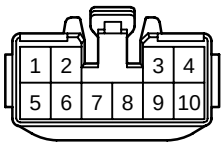

C8



C10

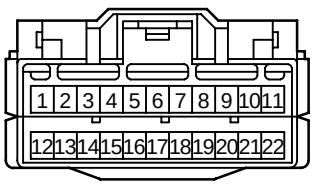

C11

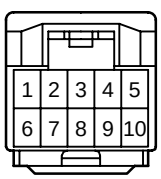

C12
BLACK

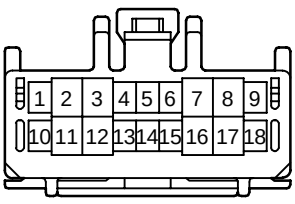

K CONNECTOR LIST

C13

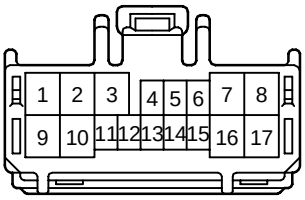

C14

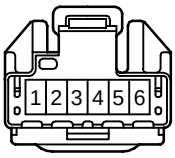

D1
GRAY

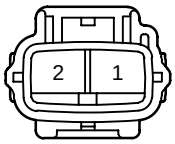

D2

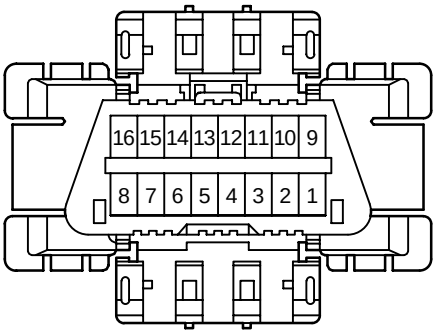

D3

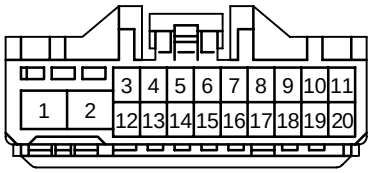

D4
BLACK

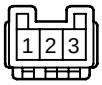

D5
BLACK



D6



D7



D8



D9



D10
BLACK

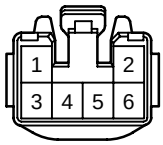

D11
BLACK



D12
BLACK



D13
BLACK

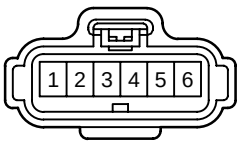

D14
BLACK

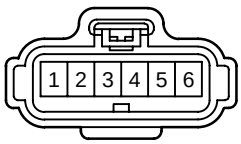

E1
DARK GRAY



E2



E3

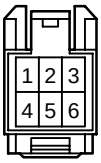

E4

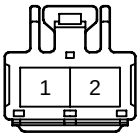

E5
GRAY



E6

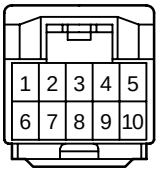

E7
BLACK

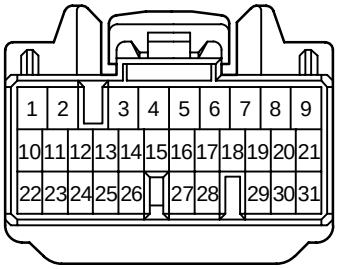

E8
BLACK

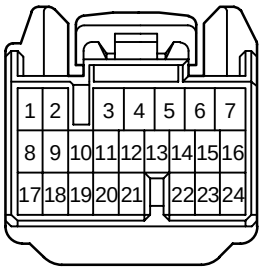

E9
BLACK

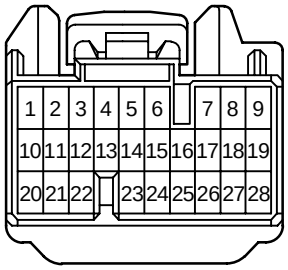

E10
BLACK

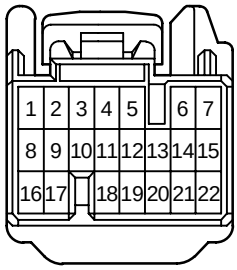

F1
YELLOW

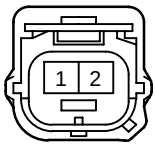

F2
YELLOW

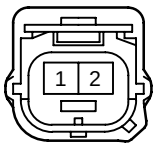

F3
GRAY



F4
GRAY



F5
BLACK



F6
BLACK



F7
GRAY

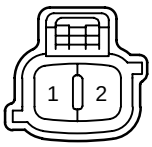

F8
GRAY

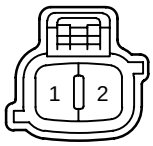

F9
GRAY

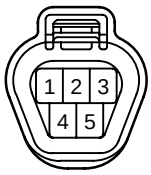

F10

(See Page 22)

F11

(See Page 22)

F12

(See Page 22)

F13
BLACK

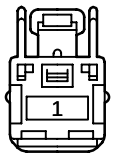

F14



F15



F16
GRAY

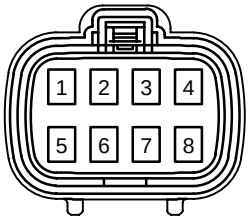

F17

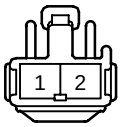

F18
BLACK

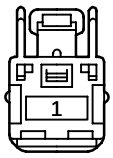

G1
GRAY

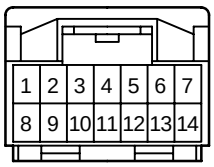

H1
GRAY

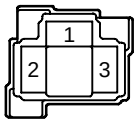

H2
GRAY

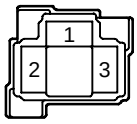

H3
DARK GRAY



H4
BLACK



H5
BLACK

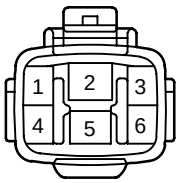

H6
GRAY

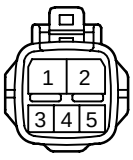

H7

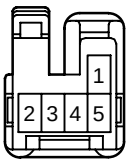

H8

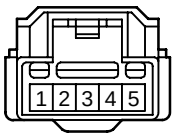

H9
DARK GRAY

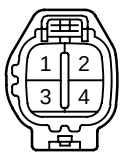

K CONNECTOR LIST

H10

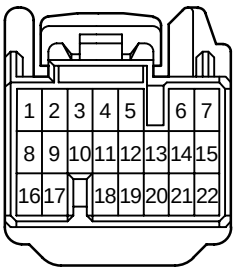

H11
BLACK

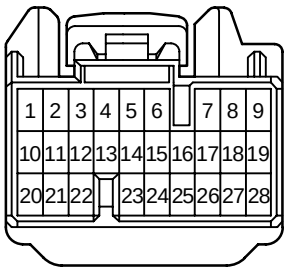

H12

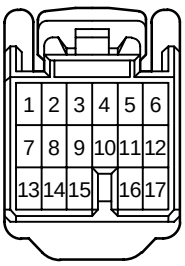

H13
BLACK

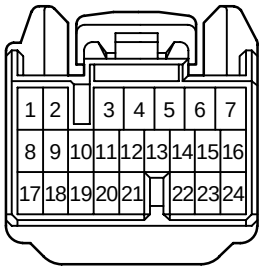

H14

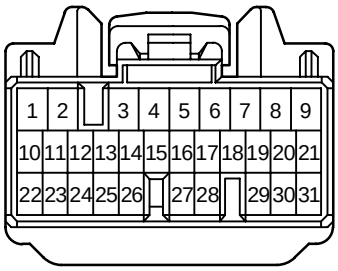

H15



H16

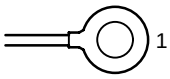

H17

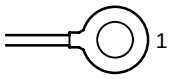

I1
BLACK

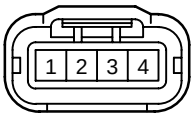

I2
GRAY

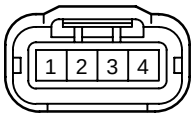

I3
BLACK

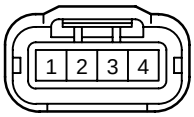

I4
GRAY

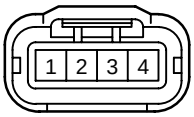

I5
BLACK

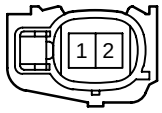

I6
GRAY

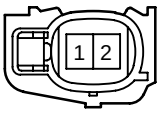

I7
BLACK

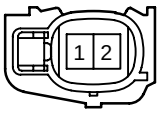

I8
GRAY

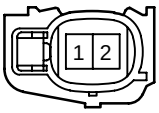

I9
GRAY



I10
GRAY



I11
GRAY



I12
GRAY

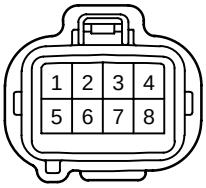

I13
ORANGE



I14
ORANGE



I15

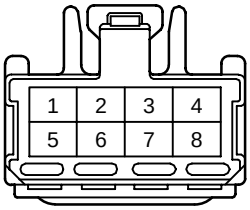

I16
BLACK

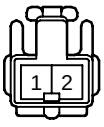

I17

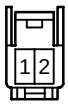

J1

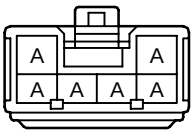

J2

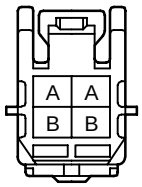

J3

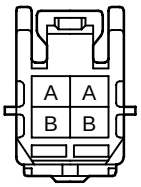

J4

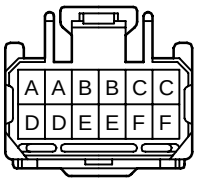

J5

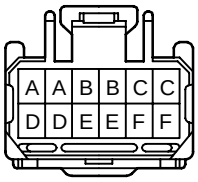

J6
(w/ Daytime Running Light)

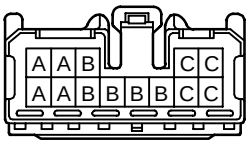

J6
(w/o Daytime Running Light)

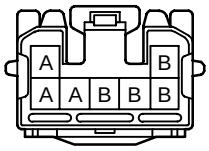

J7
BLUE



J8
GRAY

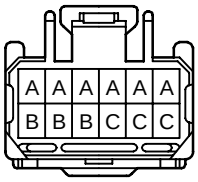

J9
GRAY

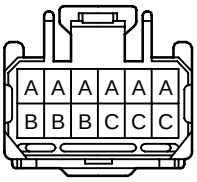

J10
BLACK

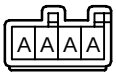

J11

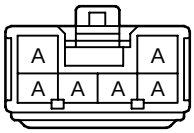

J12

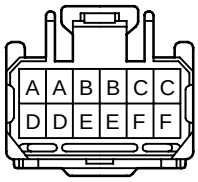

J13

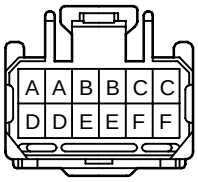

J14
BLACK

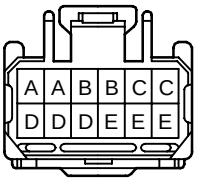

J15
BLACK

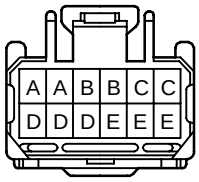

J16

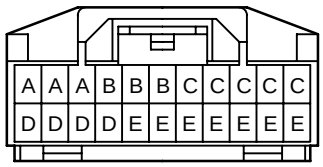

J17

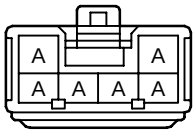

J18
GRAY

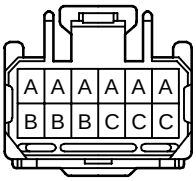

J19
GRAY

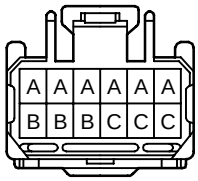

J20

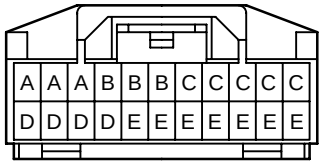

J21

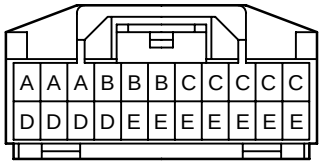

J22
BLACK

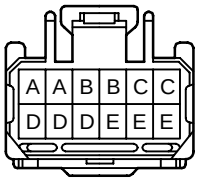

J23
BLACK

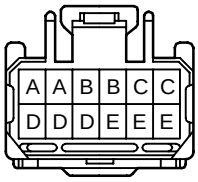

J24
GRAY

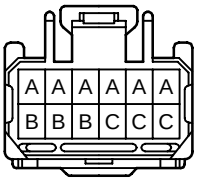

J25
GRAY

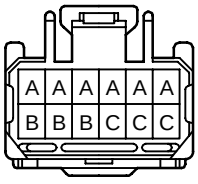

J26

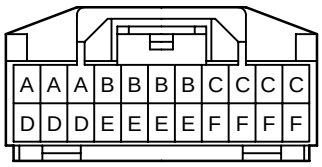

J27
BLUE

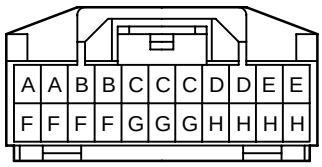

K CONNECTOR LIST

J28
BLUE

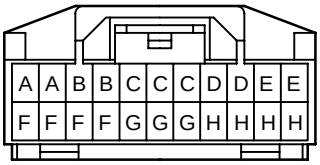

J29
BLACK



J30
BLACK

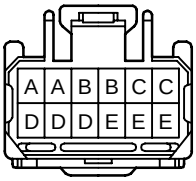

J31
BLACK

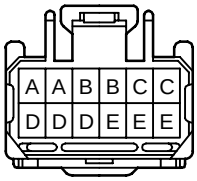

J32
GRAY

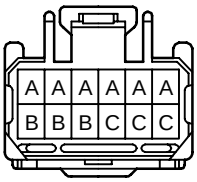

J33
GRAY

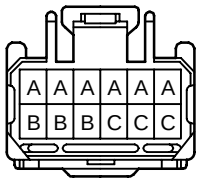

K1
DARK GRAY



L1

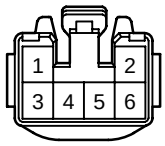

L2
GRAY



L3
GRAY



L4

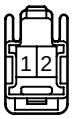

L5



L6



M1
BLACK

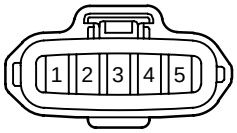

M2
GRAY

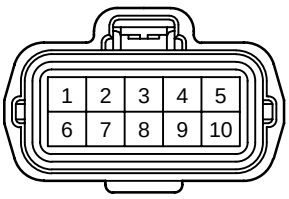

M3
GRAY



M4
GRAY



M5

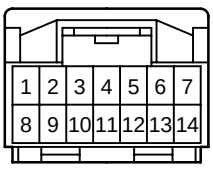

M6
BLUE

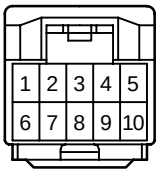

M7
BLUE

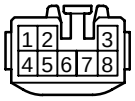

N1
GRAY

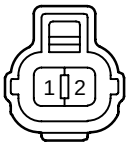

N2

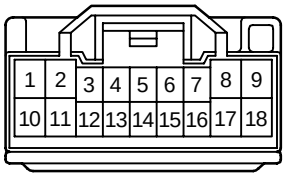

N3

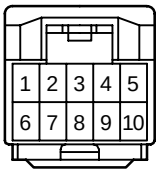

N4

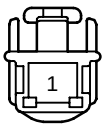

O1
BLACK



P1

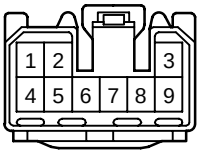

P2



P3

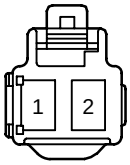

P4

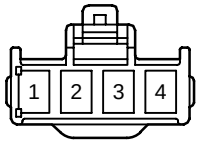

P5

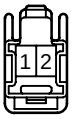

P6

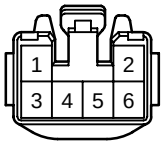

P7
GRAY

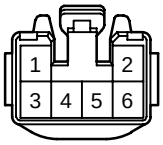

P8

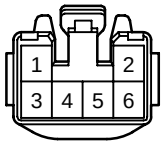

P9
BLUE

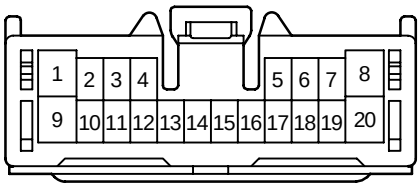

P10
BLACK

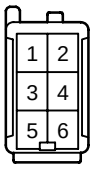

P11

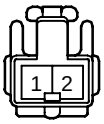

P12

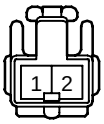

P13

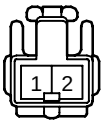

P14
YELLOW

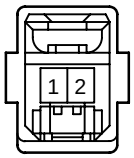

P15
YELLOW

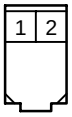

R1
BLACK



R2

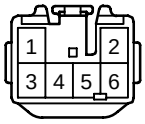

R3

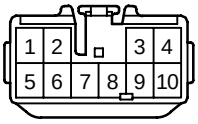

R4

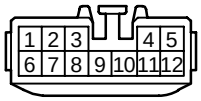

R5

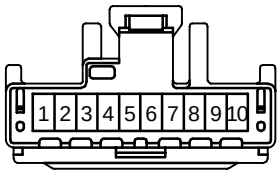

R6

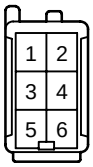

R7

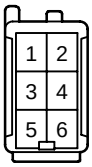

R8

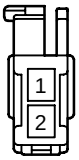

R9



R10

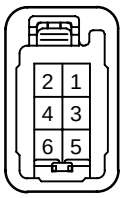

R11

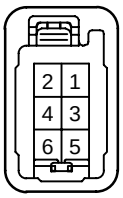

S1
GRAY



S2

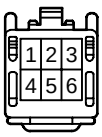

S3

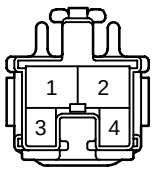

S4
YELLOW

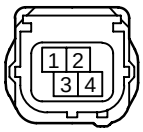

S5
YELLOW

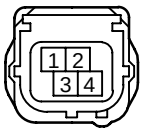

S6
YELLOW



S7
YELLOW



S8

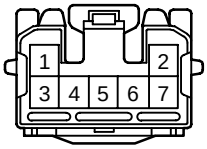

S9

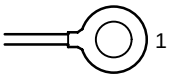

S10

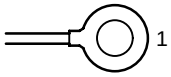

S11

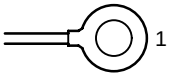

S12

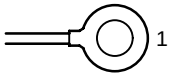

T1
BLACK

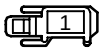

T2
BLACK



T3
BLACK

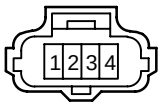

T4

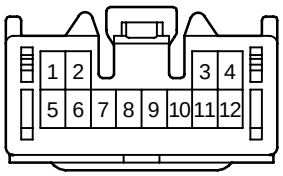

T5
BLACK



T6

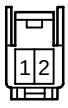

U1

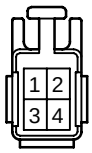

K CONNECTOR LIST

V1
BLACK

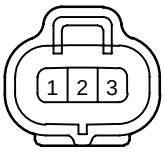

V2
BLUE

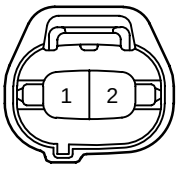

V3
BROWN

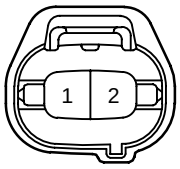

V4
BLACK



V5
BLACK

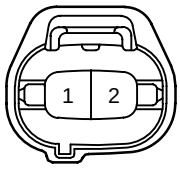

V6
BLUE



W1
BLACK

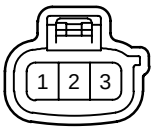

W2
BLACK



W3
GRAY



W4
DARK GRAY



W5

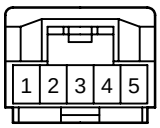

L PART NUMBER OF CONNECTORS

Code	Part Name	Part Number
A 1	A/C Condenser Fan Motor	90980–11237
A 2	A/C Magnetic Clutch and Lock Sensor	90980–10942
A 3	A/C Triple Pressure SW (A/C Dual and Single Pressure SW)	90980–10943
A 4	ABS Speed Sensor Front LH	90980–11003
A 5	ABS Speed Sensor Front RH	
A 6	Ambient Temp. Sensor	90980–11070
A 7	A/C Amplifier	90980–11911
A 8	A/C Amplifier	90980–11913
A 9	A/C Amplifier	90980–11927
A10	A/C Room Temp. Sensor	90980–11919
A11	A/C Solar Sensor	
A12	A/C Thermistor	
A13	Accel Position Sensor	90980–11144
A14	Air Inlet Control Servo Motor	90980–11921
A15	Air Mix Control Servo Motor	90980–11909
A16	Air Vent Mode Control Servo Motor	
A17	Airbag Sensor Assembly	90980–11869
A18	Airbag Sensor Assembly	90980–11872
A19	Airbag Sensor Assembly	90980–11867
A20	Airbag Squib (Front Passenger Airbag Assembly)	90980–11884
A21	Airbag Squib (Steering Wheel Pad)	90980–10850
A22	Ashtray Illumination	90980–12111
A23	ABS Speed Sensor Rear LH	90980–11060
A24	ABS Speed Sensor Rear RH	
B 1	Brake Actuator	90980–11087
B 2	Brake Actuator	90980–11161
B 3	Brake Actuator	90980–11698
B 4	Brake Fluid Level Warning SW	90980–11207
B 5	Back–Up Light Relay	82660–20340
B 6	Blower Motor	90980–10214
B 7	Blower Motor Linear Controller	90980–11676
B 8	Body ECU	90980–11971
B 9	Body ECU	90980–11973
B10	Brake ECU	90980–11935
B11	Brake ECU	90980–11476
B12	Brake ECU	90980–11637
B13	Brake ECU	90980–11638
B14	Brake Warning Buzzer	90980–10906
B15	Battery Blower Motor	82824–47130
B16	Battery Blower Motor Controller	90980–11676
B17	Battery ECU	90980–11392
B18	Battery ECU	90980–11424
B19	Battery Fan Relay	82660–20340

Code	Part Name	Part Number
B20	Buckle SW and Tension Reducer LH	90980–11471
B21	Buckle SW RH and Seat Belt Warning Occupant Detection Sensor	
B22	Battery Input Relay	90980–12199
C 1	Camshaft Position Sensor	90980–10947
C 2	Camshaft Timing Oil Control Valve	90980–11162
C 3	Circuit Breaker Sensor	90980–11898
C 4	Converter	90980–10942
C 5	Converter	90980–11963
C 6	Crankshaft Position Sensor	90980–12028
C 7	Center Cluster SW	90980–10801
C 8	Cigarette Lighter	90980–10760
C10	Combination Meter	90980–11927
C11	Combination Meter	90980–11923
C12	Combination SW	90980–11594
C13	Combination SW	90980–11672
C14	Combination SW	90980–11616
D 1	DC Motor	90980–10838
D 2	Data Link Connector 3	90980–11665
D 3	Daytime Running Light Relay	90980–12034
D 4	Diode (Door Courtesy)	90980–11251
D 5	Diode (Daytime Running Light)	90980–10962
D 6	Door Courtesy SW Front LH	90980–10871
D 7	Door Courtesy SW Front RH	
D 8	Door Courtesy SW Rear LH	
D 9	Door Courtesy SW Rear RH	
D10	Door Lock Control SW Front RH	90980–10797
D11	Door Lock Motor and Door Unlock Detection SW Rear LH	90980–11150
D12	Door Lock Motor and Door Unlock Detection SW Rear RH	
D13	Door Lock Motor, Door Key Lock and Unlock SW and Door Unlock Detection SW Front LH	90980–11858
D14	Door Lock Motor, Door Key Lock and Unlock SW and Door Unlock Detection SW Front RH	
E 1	Engine Coolant Temp. Sensor	90980–10737
E 2	Engine Hood Courtesy SW	90980–11189
E 3	EMPS ECU	90980–12012
E 4	EMPS ECU	90980–11579
E 5	EMPS ECU	90980–12120
E 6	EMPS ECU	90980–11923
E 7	Engine Control Module	90980–11421
E 8	Engine Control Module	90980–11476
E 9	Engine Control Module	90980–11637

Note: Not all of the above part numbers of the connector are established for the supply.

Code	Part Name	Part Number
E10	Engine Control Module	90980–11638
F 1	Front Airbag Sensor LH	90980–11856
F 2	Front Airbag Sensor RH	
F 3	Front Parking Light LH	90980–11162
F 4	Front Parking Light RH	
F 5	Front Side Marker Light LH	
F 6	Front Side Marker Light RH	
F 7	Front Turn Signal Light LH	90980–11019
F 8	Front Turn Signal Light RH	
F 9	Front Wiper Motor	90980–11599
F10	Fusible Link Block No.1	–
F11	Fusible Link Block No.1	
F12	Fusible Link Block No.1	
F13	Fusible Link Block No.1	90980–11775
F14	Front Door Speaker LH	90980–10935
F15	Front Door Speaker RH	
F16	Fuel Pump and Fuel Sender	82824–47160
F17	Fusible Link Block No.2	90980–10916
F18	Fusible Link Block No.2	90980–11775
G 1	Gateway ECU	90980–11911
H 1	Headlight LH	90980–11314
H 2	Headlight RH	
H 3	Heated Oxygen Sensor (Bank 1 Sensor1)	90980–11028
H 4	Horn	90980–10619
H 5	Hydraulic Booster	90980–10939
H 6	Hydraulic Booster	90980–10946
H 7	Hazard Warning SW	90980–11319
H 8	Hazard Warning SW	90980–11921
H 9	Heated Oxygen Sensor (Bank 1 Sensor 2)	90980–11028
H10	Hybrid Vehicle Control ECU	90980–11638
H11	Hybrid Vehicle Control ECU	90980–11637
H12	Hybrid Vehicle Control ECU	90980–11586
H13	Hybrid Vehicle Control ECU	90980–11476
H14	Hybrid Vehicle Control ECU	90980–11421
H15	High Mounted Stop Light	90980–11060
H16	Hybrid Vehicle Battery	–
H17	Hybrid Vehicle Battery	
I 1	Ignition Coil and Igniter No.1	90980–11885
I 2	Ignition Coil and Igniter No.2	
I 3	Ignition Coil and Igniter No.3	
I 4	Ignition Coil and Igniter No.4	
I 5	Injector No.1	90980–11875
I 6	Injector No.2	
I 7	Injector No.3	
I 8	Injector No.4	
I 9	Inverter	90980–11034

Code	Part Name	Part Number
I10	Inverter	90980–10891
I11	Inverter	90980–10988
I12	Inverter	90980–10897
I13	Inverter	90980–11943
I14	Inverter	90980–11944
I15	Ignition SW	90980–11615
I16	Interior Light	90980–10860
I17	Interlock SW	90980–11918
J 1	Junction Connector	90980–10976
J 2	Junction Connector	90980–11742
J 3	Junction Connector	
J 4	Junction Connector	90980–11661
J 5	Junction Connector	
J 6	Junction Connector (w/ Daytime Running Light)	90980–11542
	Junction Connector (w/o Daytime Running Light)	90980–11529
J 7	Junction Connector	90980–10803
J 8	Junction Connector	90980–11661
J 9	Junction Connector	
J10	Junction Connector	90980–11398
J11	Junction Connector	90980–10976
J12	Junction Connector	90980–11661
J13	Junction Connector	
J14	Junction Connector	
J15	Junction Connector	
J16	Junction Connector	90980–11915
J17	Junction Connector	90980–10976
J18	Junction Connector	90980–11661
J19	Junction Connector	
J20	Junction Connector	90980–11915
J21	Junction Connector	
J22	Junction Connector	90980–11661
J23	Junction Connector	
J24	Junction Connector	
J25	Junction Connector	
J26	Junction Connector	90980–11915
J27	Junction Connector	
J28	Junction Connector	
J29	Junction Connector	90980–11398
J30	Junction Connector	90980–11661
J31	Junction Connector	
J32	Junction Connector	
J33	Junction Connector	
K 1	Knock Sensor	90980–11166
L 1	Light Control Rheostat	90980–10797

L PART NUMBER OF CONNECTORS

Code	Part Name	Part Number
L 2	License Plate Light LH	90980–11148
L 3	License Plate Light RH	
L 4	Luggage Compartment Door Unlock SW	90980–11212
L 5	Luggage Compartment Light	90980–11148
L 6	Luggage Compartment Light SW	90980–11097
M 1	Mass Air Flow Meter	90980–11317
M 2	Motor Generator No.1	90980–11658
M 3	Motor Generator No.2	90980–11034
M 4	Motor Generator No.2	90980–11143
M 5	Multi Display	90980–11911
M 6	Multi Display	90980–11923
M 7	Multi Display	90980–10799
N 1	Noise Filter (Ignition)	90980–10843
N 2	Navigation ECU	90980–11973
N 3	Navigation ECU	90980–11923
N 4	Noise Filter (Rear Window Defogger)	90980–11259
O 1	Oil Pressure SW	90980–11363
P 1	Park/Neutral Position SW	90980–11535
P 2	Parking Brake SW	90980–11147
P 3	PTC Heater	90980–10903
P 4	PTC Heater	90980–10867
P 5	Personal Light	90980–11212
P 6	Power Window Control SW Front RH	90980–10797
P 7	Power Window Control SW Rear LH	
P 8	Power Window Control SW Rear RH	
P 9	Power Window Master SW	90980–11469
P10	Power Window Motor Front LH	90980–11011
P11	Power Window Motor Front RH	90980–10860
P12	Power Window Motor Rear LH	
P13	Power Window Motor Rear RH	
P14	Pretensioner LH	90980–11884
P15	Pretensioner RH	90980–11862
R 1	Radiator Fan Motor	90980–11237
R 2	Radio and Player	90980–10996
R 3	Radio and Player	90980–10997
R 4	Radio and Player	90980–10803
R 5	Remote Control Mirror SW	90980–11657
R 6	Rear Combination Light LH	90980–11011
R 7	Rear Combination Light RH	
R 8	Rear Speaker LH	90980–10935
R 9	Rear Speaker RH	
R10	Remote Control Mirror LH	90980–11587
R11	Remote Control Mirror RH	
S 1	Steering Shaft Torque Sensor	90980–10942
S 2	Shift Lock ECU	90980–11488
S 3	Stop Light SW	90980–11118

Code	Part Name	Part Number
S 4	Side Airbag Sensor LH	90980–11857
S 5	Side Airbag Sensor RH	
S 6	Side Airbag Squib LH	90980–11864
S 7	Side Airbag Squib RH	
S 8	System Main Relay	90980–11529
S 9	System Main Relay	82675–36050
S10	System Main Relay	
S11	System Main Relay	–
S12	System Main Relay	
T 1	Theft Deterrent Horn	90980–10619
T 2	Throttle Control Motor	90980–11162
T 3	Throttle Position Sensor	90980–10711
T 4	Transponder Key Computer	90980–11475
T 5	Turn Signal Flasher Relay	90980–10799
T 6	Tension Reducer Solenoid	90980–11918
U 1	Unlock Warning SW and Key Interlock Solenoid	90980–10795
V 1	Vacuum Sensor (HC Adsorber and Catalyst System)	90980–10845
V 2	VSV (EVAP)	90980–11156
V 3	VSV (HC Adsorber and Catalyst System)	90980–11149
V 4	Vapor Pressure Sensor	90980–11143
V 5	VSV (Canister Closed Valve)	90980–11156
V 6	VSV (Parge Flow Switching Valve)	90980–11859
W 1	Washer Motor	90980–10981
W 2	Water Pump Motor (A/C)	90980–10887
W 3	Water Pump Motor (Inverter)	90980–11003
W 4	Water Temp. SW	90980–11235
W 5	Wireless Door Control Receiver	90980–11909

Note: Not all of the above part numbers of the connector are established for the supply.

Code	Part Name	Part Number	Code	Part Name	Part Number

M OVERALL ELECTRICAL WIRING DIAGRAM

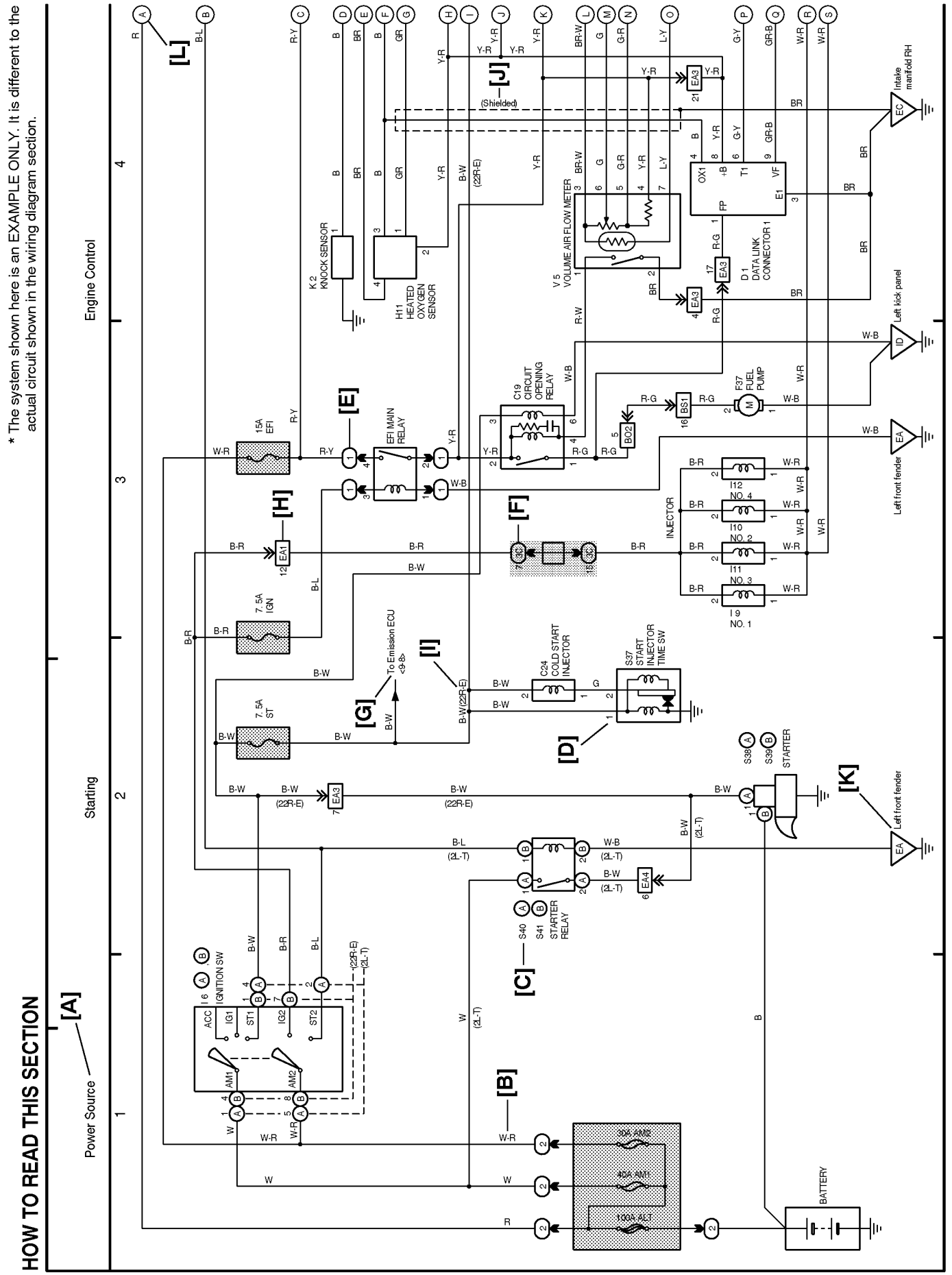

[A] : System Title

[B] : Indicates the wiring color.

Wire colors are indicated by an alphabetical code.

B	= Black	W	= White	BR	= Brown
L	= Blue	V	= Violet	SB	= Sky Blue
R	= Red	O	= Orange	LG	= Light Green
P	= Pink	Y	= Yellow	GR	= Gray
G	= Green				

The first letter indicates the basic wire color and the second letter indicates the color of the stripe.

Example: L – Y

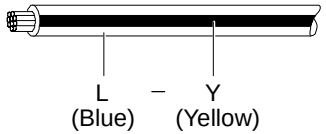

[C] : The position of the parts is the same as shown in the wiring diagram and wire routing.

[D] : Indicates the pin number of the connector. The numbering system is different for female and male connectors.

Example : Numbered in order from upper left to lower right / Numbered in order from upper right to lower left

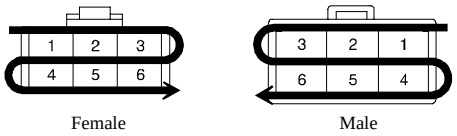

The numbering system for the overall wiring diagram is the same as above

[E] : Indicates a Relay Block. No shading is used and only the Relay Block No. is shown to distinguish it from the J/B.

Example : (1) Indicates Relay Block No.1

[F] : Junction Block (The number in the circle is the J/B No. and the connector code is shown beside it). Junction Blocks are shaded to clearly separate them from other parts.

Example:

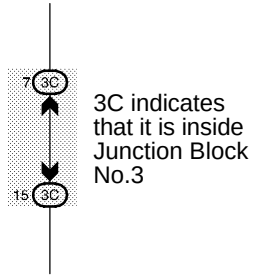

[G] : Indicates related system.

[H] : Indicates the wiring harness and wiring harness connector. The wiring harness with male terminal is shown with arrows (»). Outside numerals are pin numbers.

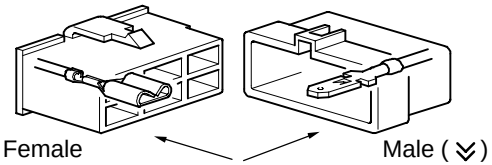

[I] : ( ) is used to indicate different wiring and connector, etc. when the vehicle model, engine type, or specification is different.

[J] : Indicates a shielded cable.



[K] : Indicates and located on ground point.

[L] : The same code occuring on the next page indicates that the wire harness is continuous.

SYSTEM INDEX

SYSTEMS	LOCATION
ABS	19–3
Air Conditioning	24–2
Back–Up Light	6–2
Cigarette Lighter	11–4
Combination Meter	23–2
Door Lock Control	15–2
Electric Tension Reducer	13–4
EMPS	20–3
Engine Control	2–3
Gateway System	14–8
Headlight (w/ Daytime Running Light)	4–2
Headlight (w/o Daytime Running Light)	3–2
Horn	12–2
Hybrid Vehicle Immobiliser System	2–16
Illumination	8–2
Interior Light	10–3
Key Reminder	9–2
Light Auto Turn Off	9–3
Light Reminder Buzzer	9–2

SYSTEMS	LOCATION
Navigation System	14–5
Power Source	1~24–1
Power Window	18–2
Radiator Fan and Condenser Fan	22–3
Radio and Player	14–2
Rear Window Defogger	22–2
Remote Control Mirror	11–2
Seat Belt Warning	9–4
Shift Lock	13–3
SRS	21–2
Stop Light	3–4
Taillight	7–2
Theft Deterrent	17–2
TOYOTA Hybrid System ∗ Charging ∗ Cruise Control ∗ Regenerative Brake	1–2
Turn Signal and Hazard Warning Light	5–2
Wiper and Washer	12–3
Wireless Door Lock Control	16–2

1 PRIUS ELECTRICAL WIRING DIAGRAM

(Cont. next page)

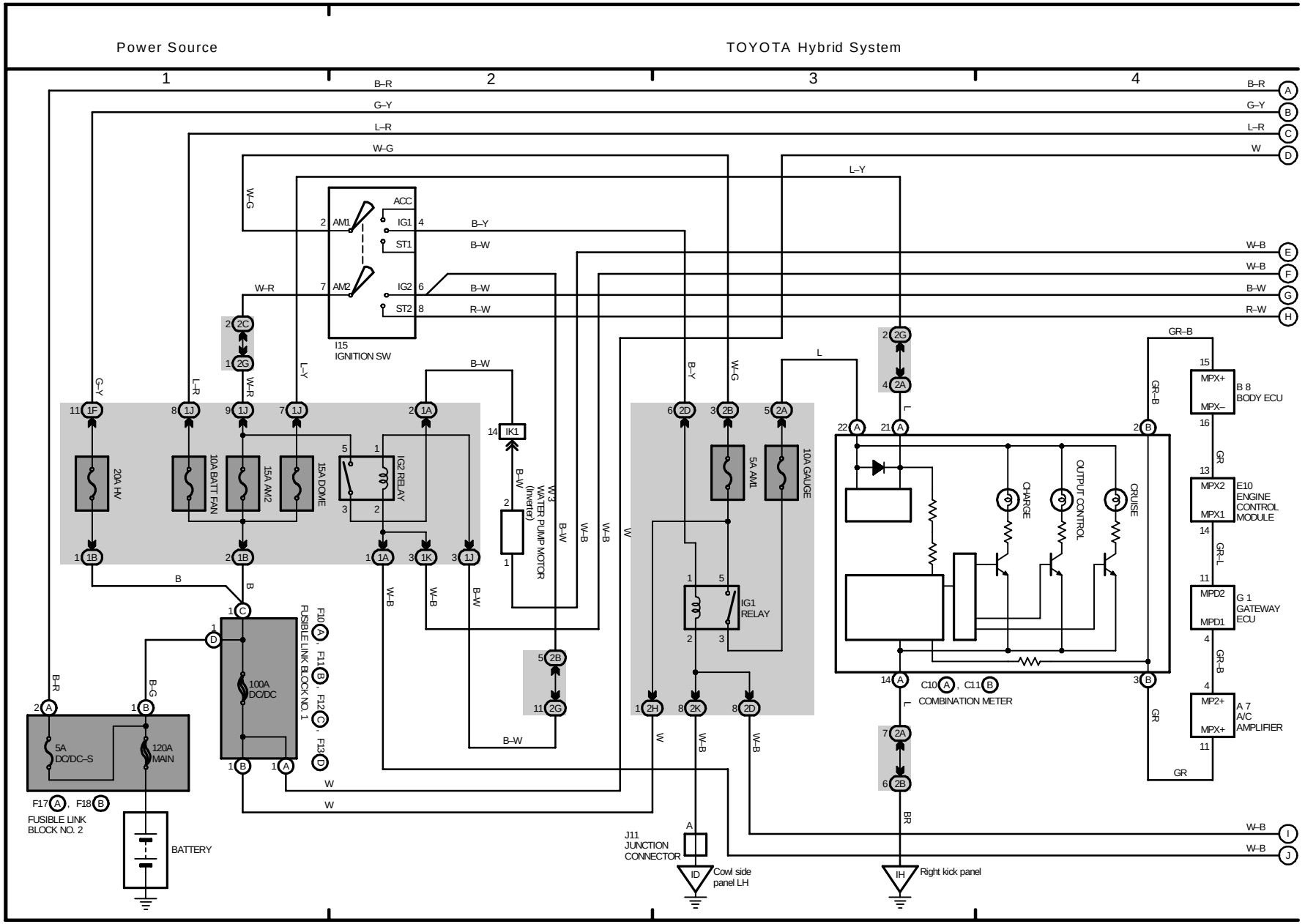

M OVERALL ELECTRICAL WIRING DIAGRAM

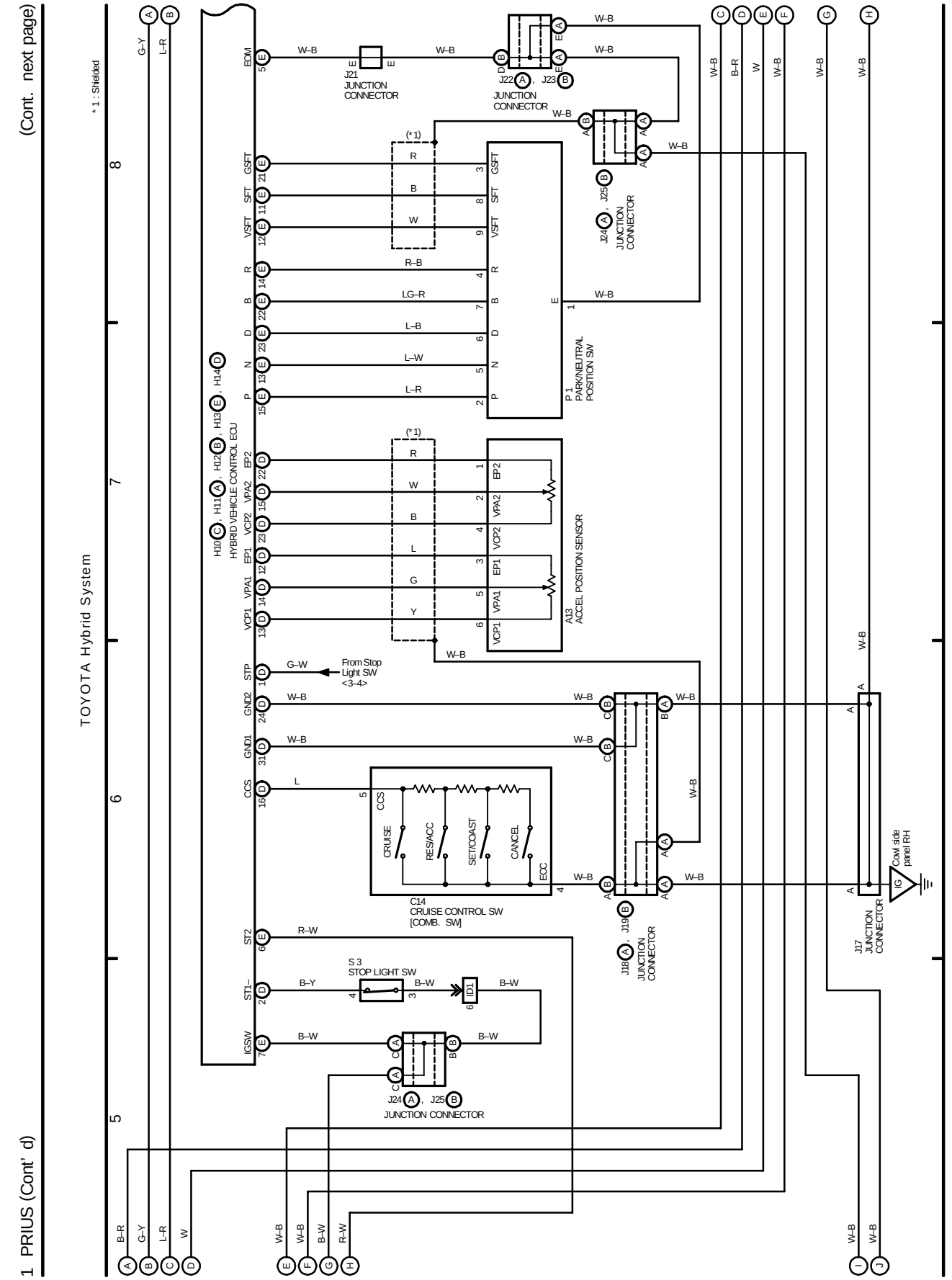

(Cont. next page)

TOYOTA Hybrid System

* 1 : Shielded

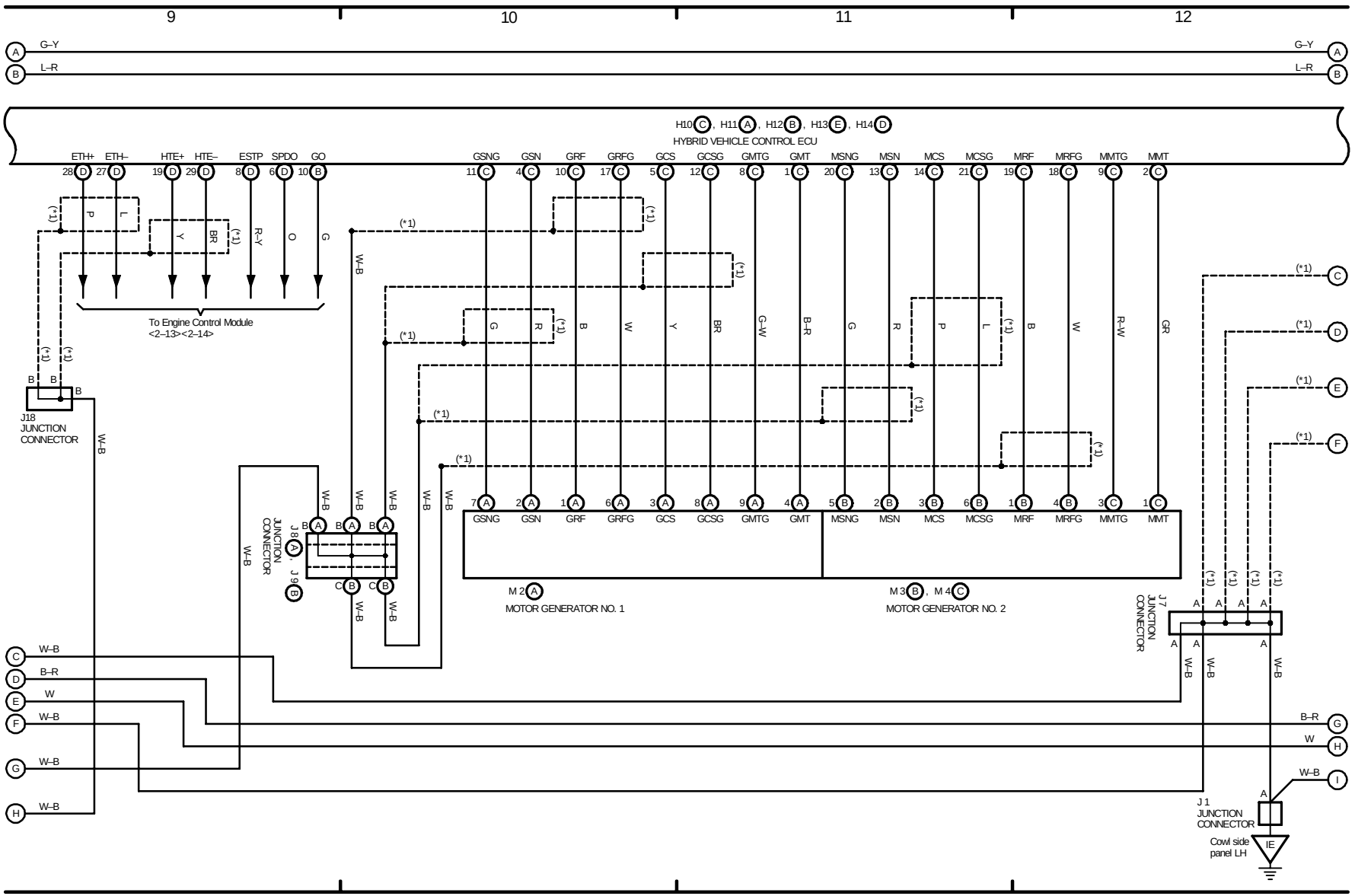

M OVERALL ELECTRICAL WIRING DIAGRAM

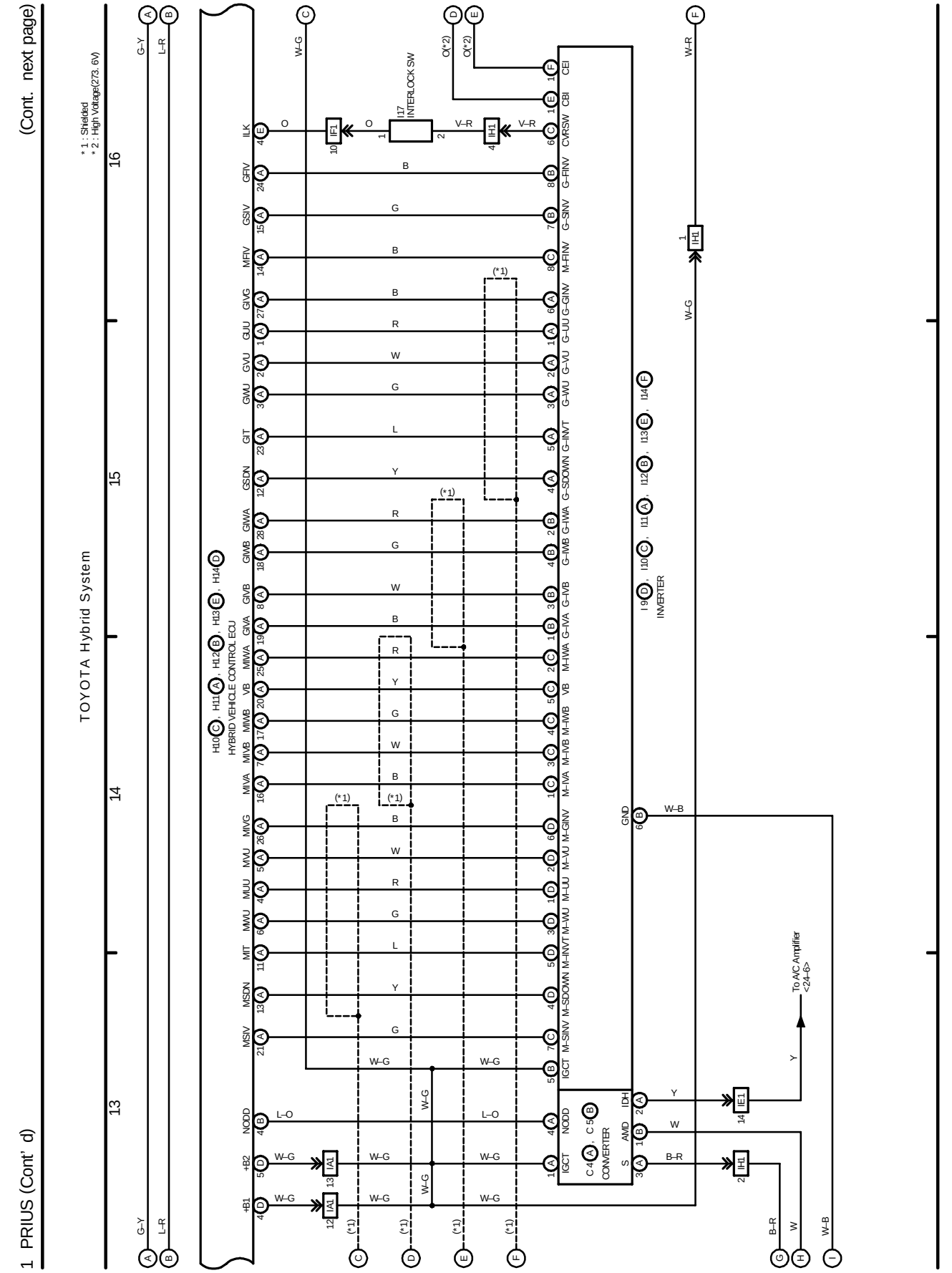

(Cont. next page)

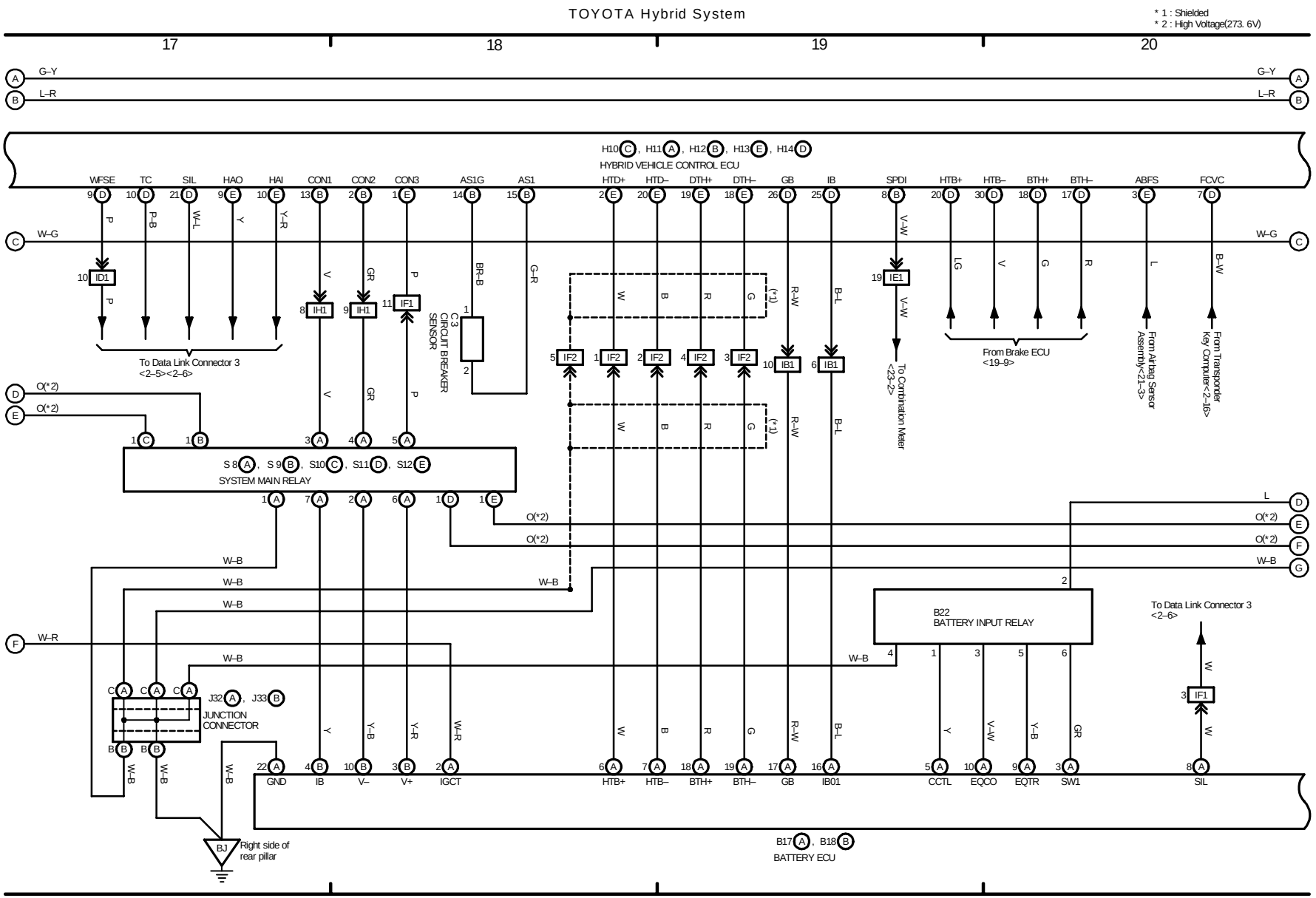

M OVERALL ELECTRICAL WIRING DIAGRAM

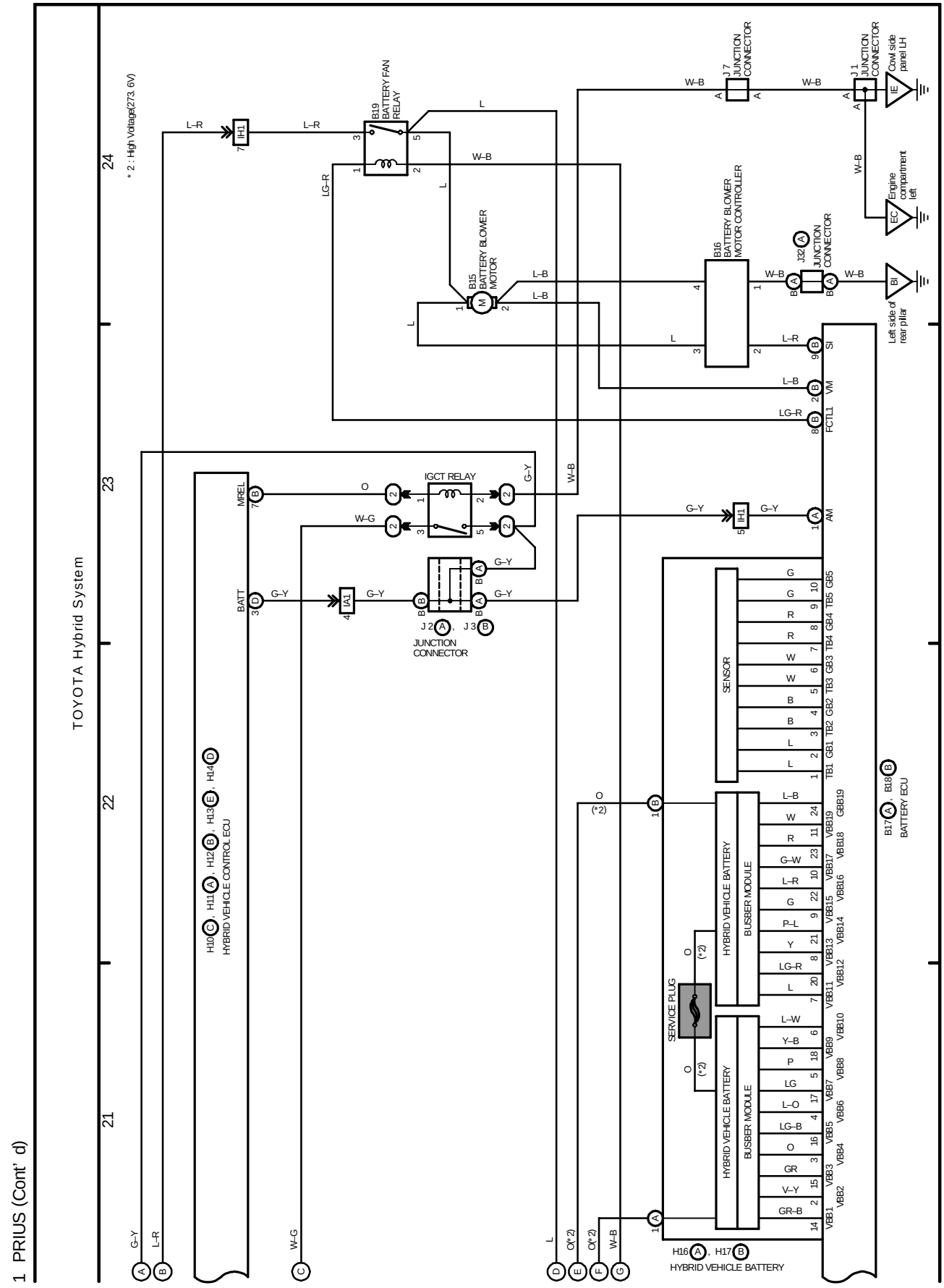

M OVERALL ELECTRICAL WIRING DIAGRAM

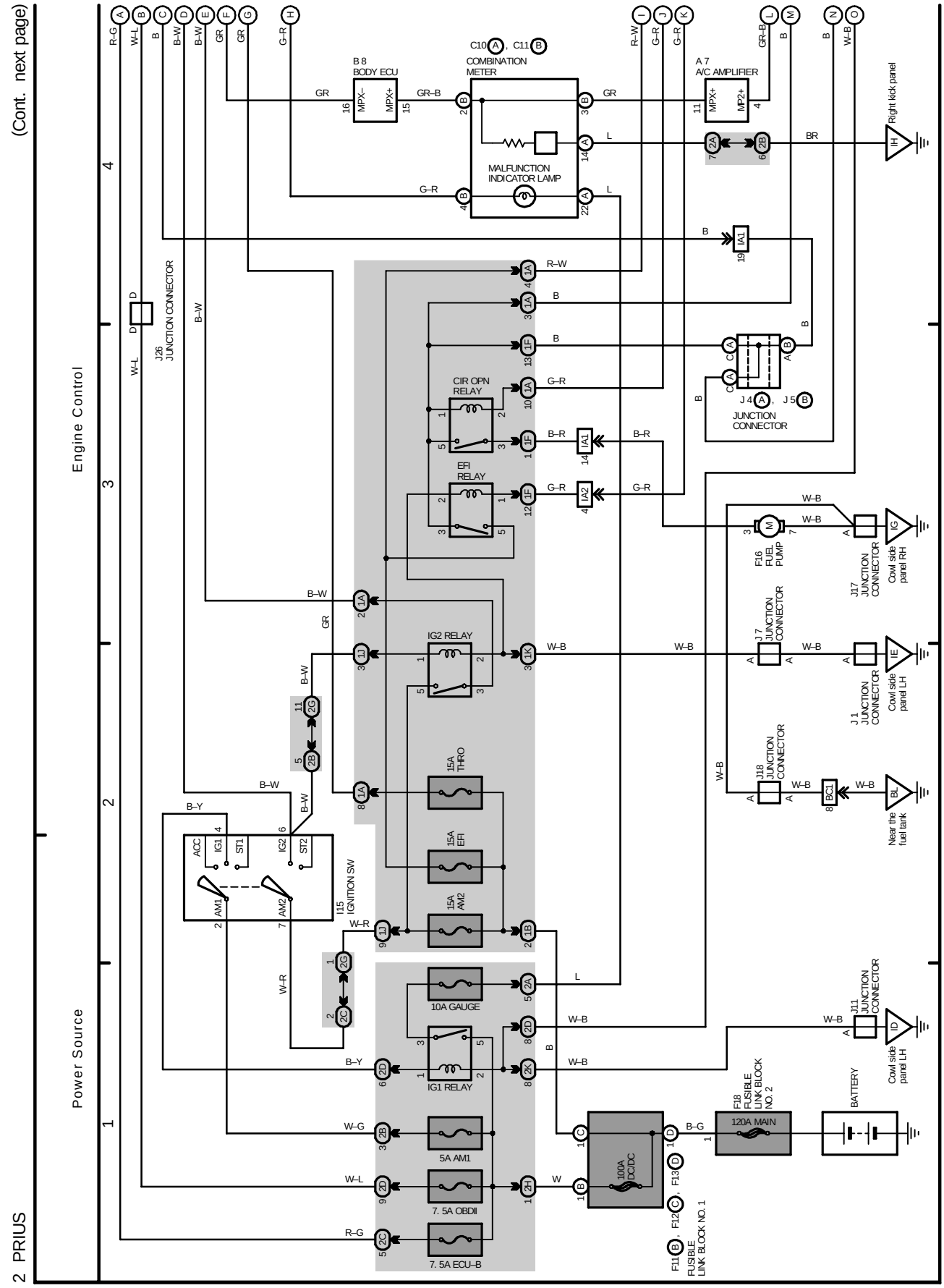

(Cont. next page)

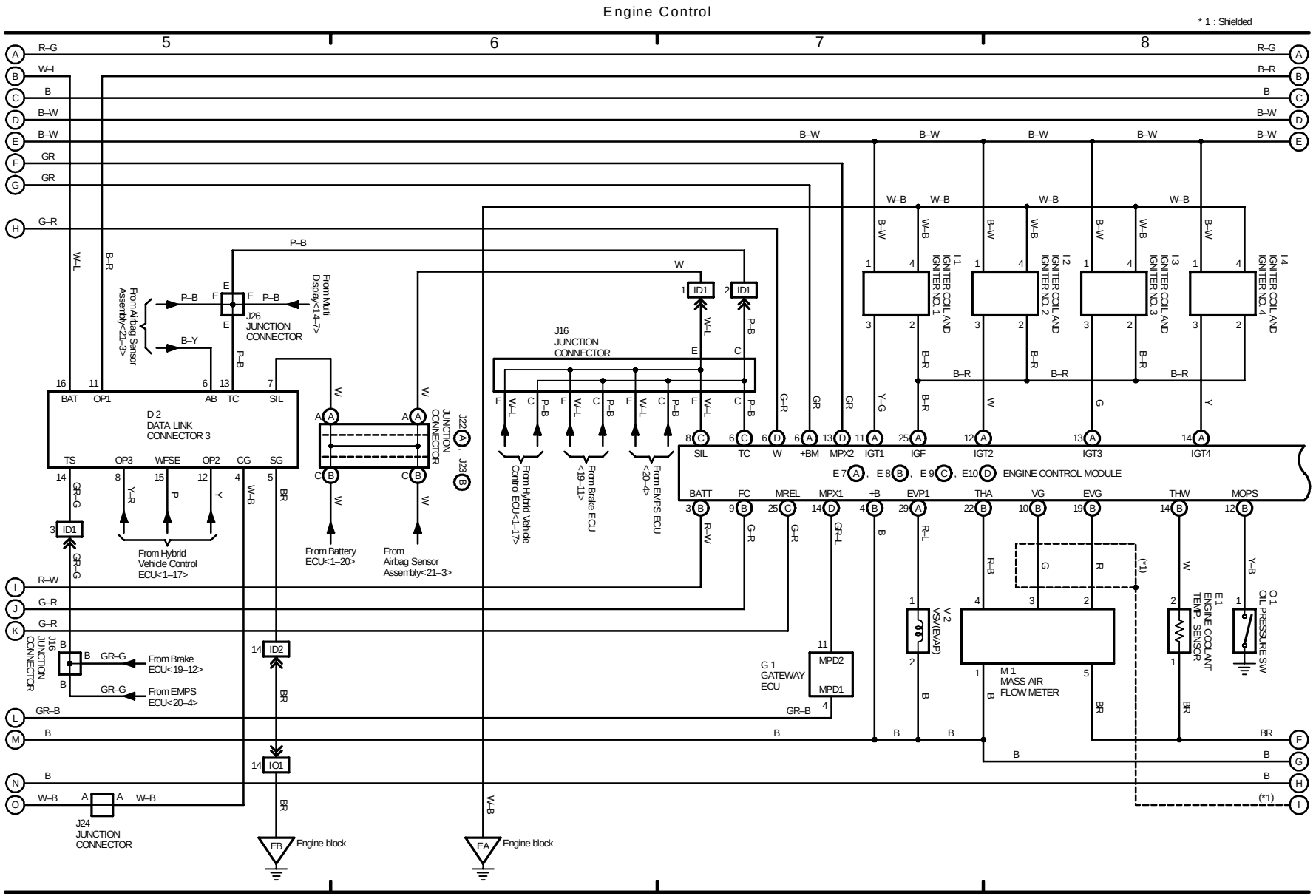

M OVERALL ELECTRICAL WIRING DIAGRAM

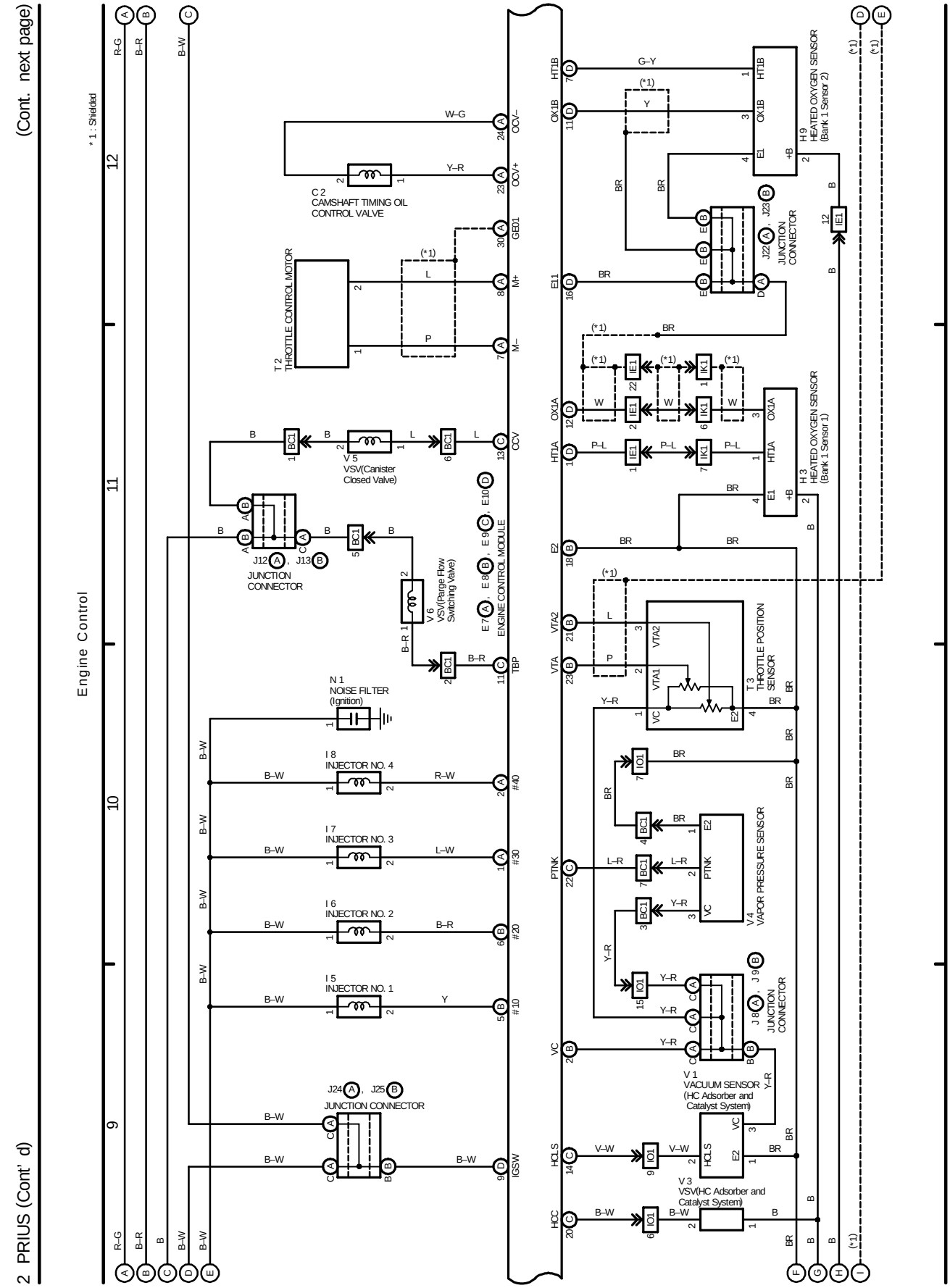

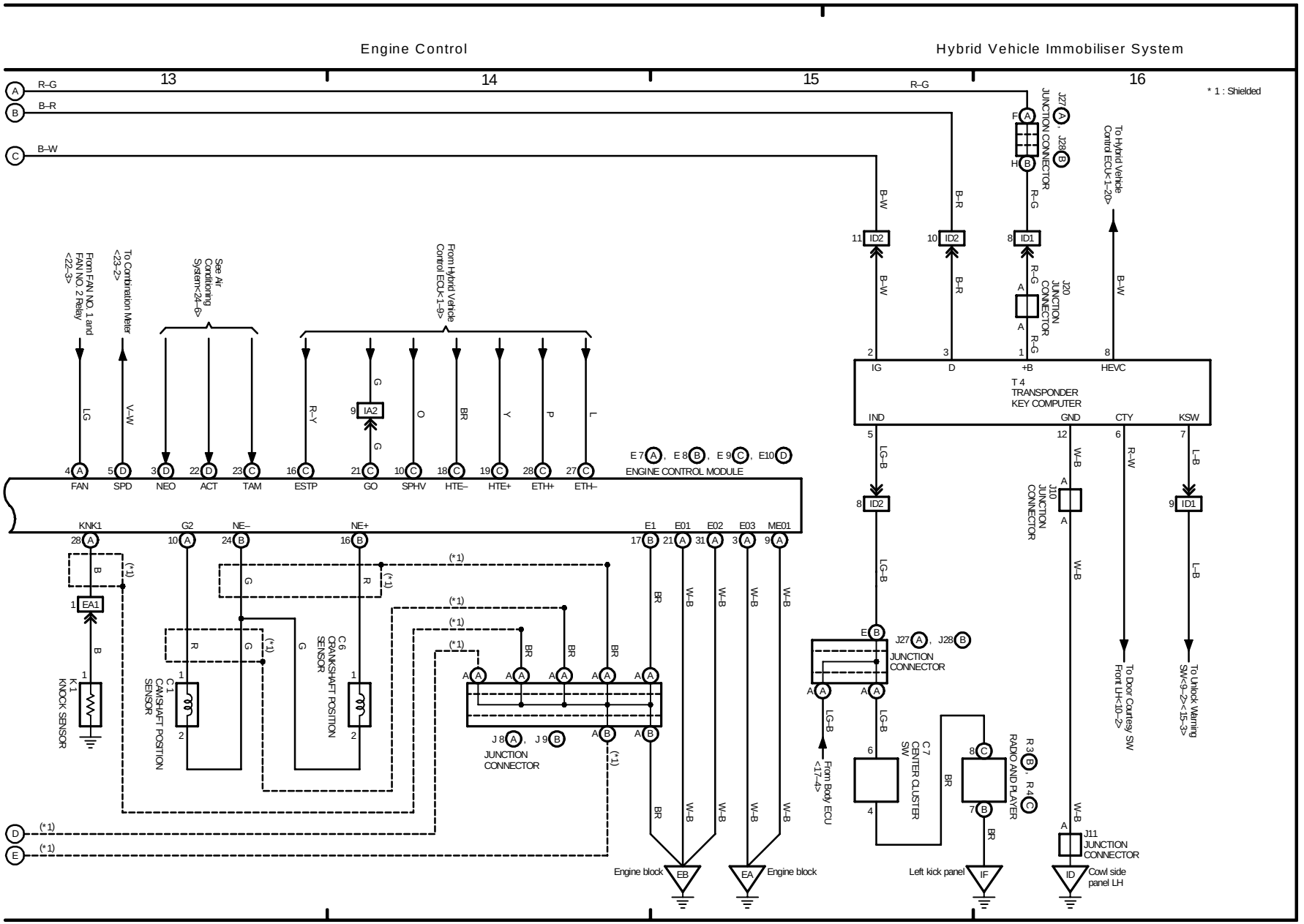
Engine Control
Hybrid Vehicle Immobiliser System
13
14
15
16
* 1 : Shielded
R–G
B–R
B–W
From FAN NO. 1 and FAN NO. 2 Relay <22–3>
To Combination Meter <23–2>
See Air Conditioning System<24–6>
From Hybrid Vehicle Control ECU<1–9>
To Hybrid Vehicle Control ECU<1–20>
LG
V–W
R–Y
G
O
BR
Y
P
L
IA2
FAN
SPD
NEO
ACT
TAM
ESTP
GO
SPHV
HTE–
HTE+
ETH+
ETH–
E7, E8, E9, E10
ENGINE CONTROL MODULE
KNK1
G2
NE–
NE+
E1
E01
E02
E03
ME01
EA1
K1
KNOCK SENSOR
C1
CAMSHAFT POSITION SENSOR
C6
CRANKSHAFT POSITION SENSOR
J8, J9
JUNCTION CONNECTOR
Engine block
EB
EA
Engine block
W–B
LG–B
ID2
ID1
J27, J28
JUNCTION CONNECTOR
J20
JUNCTION CONNECTOR
T 4
TRANSPONDER KEY COMPUTER
IG
D
+B
HEVC
IND
GND
CTY
KSW
J10
JUNCTION CONNECTOR
From Body ECU <17–4>
C7
CENTER CLUSTER SW
R3, R4
RADIO AND PLAYER
To Door Courtesy SW Front LH<10–2>
To Unlock Warning SW<9–2><15–3>
J11
JUNCTION CONNECTOR
Left kick panel
IF
ID
Cowl side panel LH

M OVERALL ELECTRICAL WIRING DIAGRAM

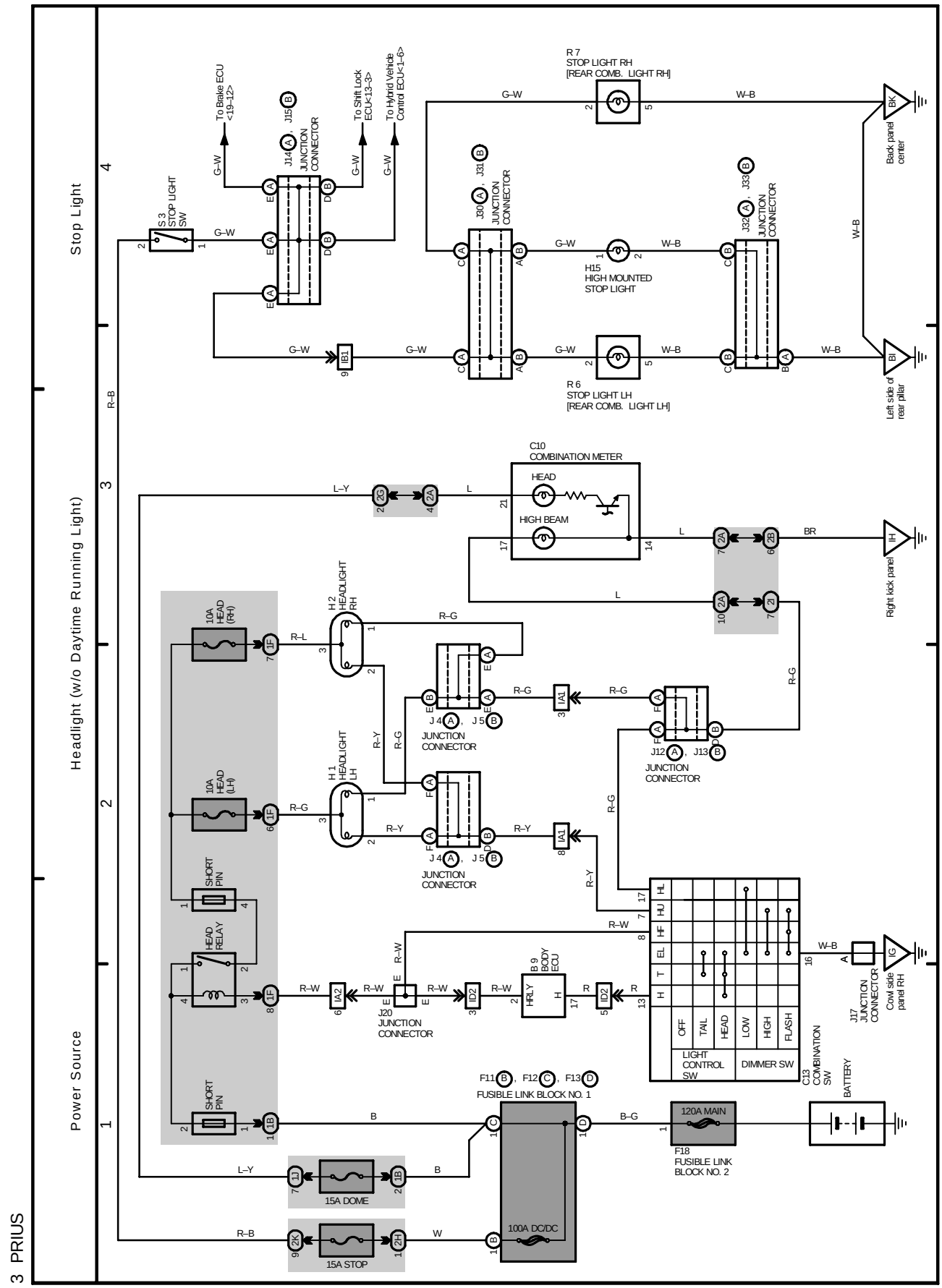

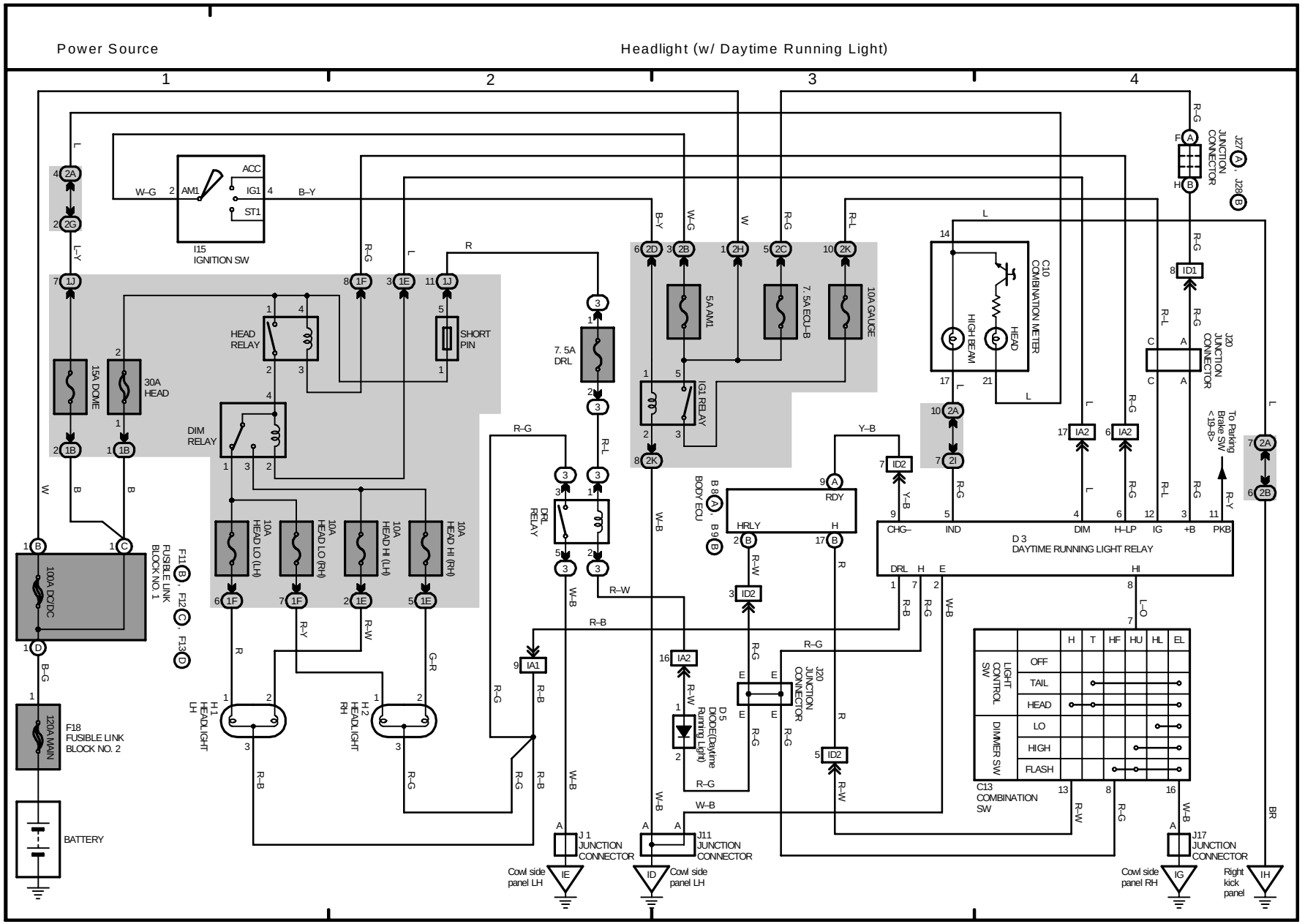
Power Source
Headlight (w/ Daytime Running Light)
1
2
3
4
I15
IGNITION SW
ACC
IG1
ST1
AM1
HEAD RELAY
DIM RELAY
SHORT PIN
15A DOME
30A HEAD
5A AM1
7. 5A ECU–B
10A GAUGE
IG1 RELAY
7. 5A DRL
DRL RELAY
10A HEAD LO (LH)
10A HEAD LO (RH)
10A HEAD H (LH)
10A HEAD H (RH)
100A DC/DC
F11 , F12 , F13
FUSIBLE LINK BLOCK NO. 1
F18
120A MAIN
FUSIBLE LINK BLOCK NO. 2
BATTERY
H1 HEADLIGHT LH
H2 HEADLIGHT RH
C10
COMBINATION METER
HIGH BEAM
HEAD
J20
JUNCTION CONNECTOR
J27 , J28
JUNCTION CONNECTOR
To Parking Brake SW <19–8>
B 8 , B 9
BODY ECU
RDY
HRLY
D 3
DAYTIME RUNNING LIGHT RELAY
CHG–
IND
DIM
H–LP
IG
+B
PKB
DRL
H
E
HI
D 5
DIODE(Daytime Running Light)
C13
COMBINATION SW
LIGHT CONTROL SW
DIMMER SW
OFF
TAIL
HEAD
LO
HIGH
FLASH
H
T
HF
HU
HL
EL
J 1
JUNCTION CONNECTOR
J11
JUNCTION CONNECTOR
J17
JUNCTION CONNECTOR
Cowl side panel LH
Cowl side panel LH
Cowl side panel RH
Right kick panel
IE
ID
IG
IH

M OVERALL ELECTRICAL WIRING DIAGRAM

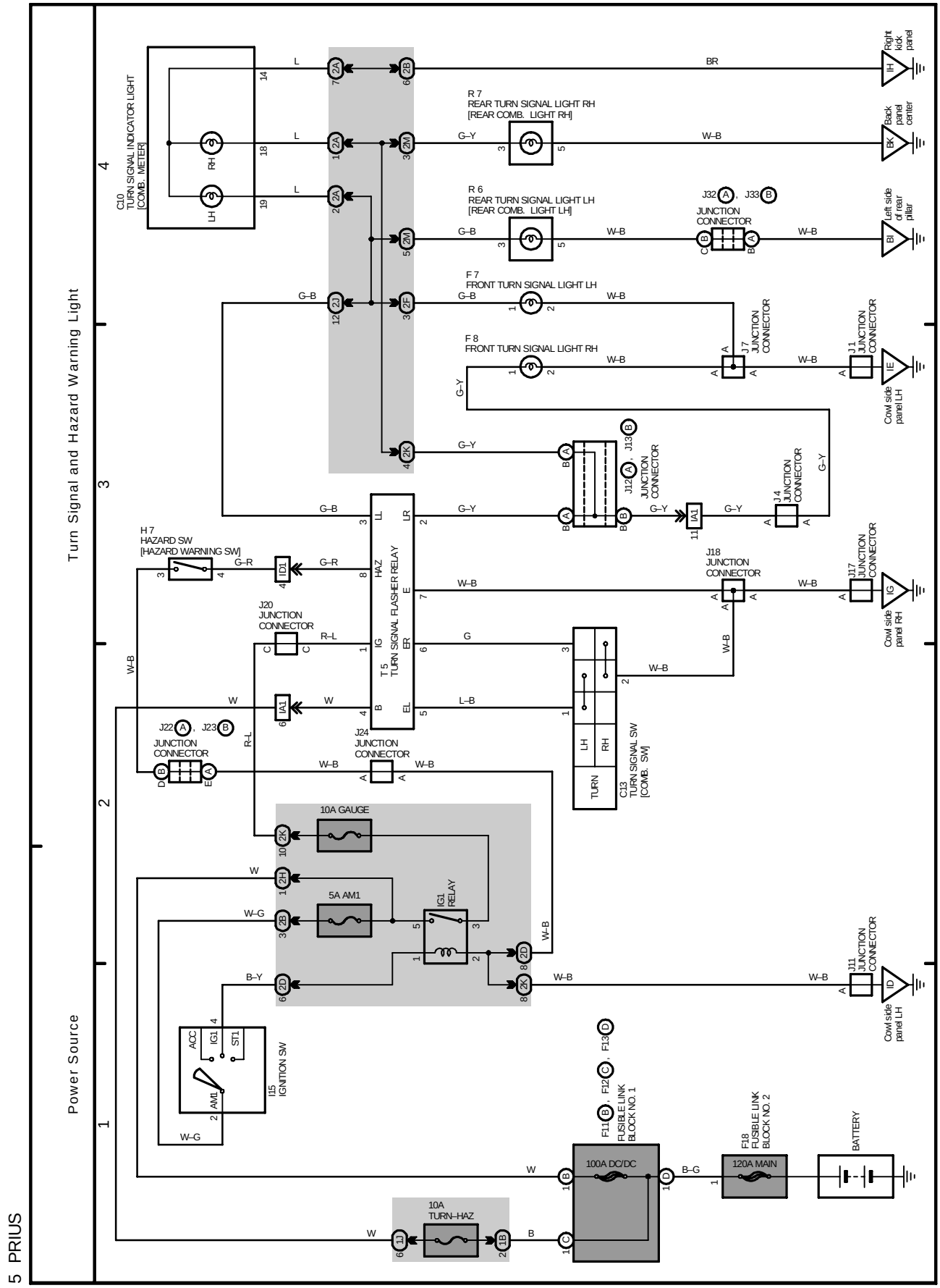

6 PRIUS

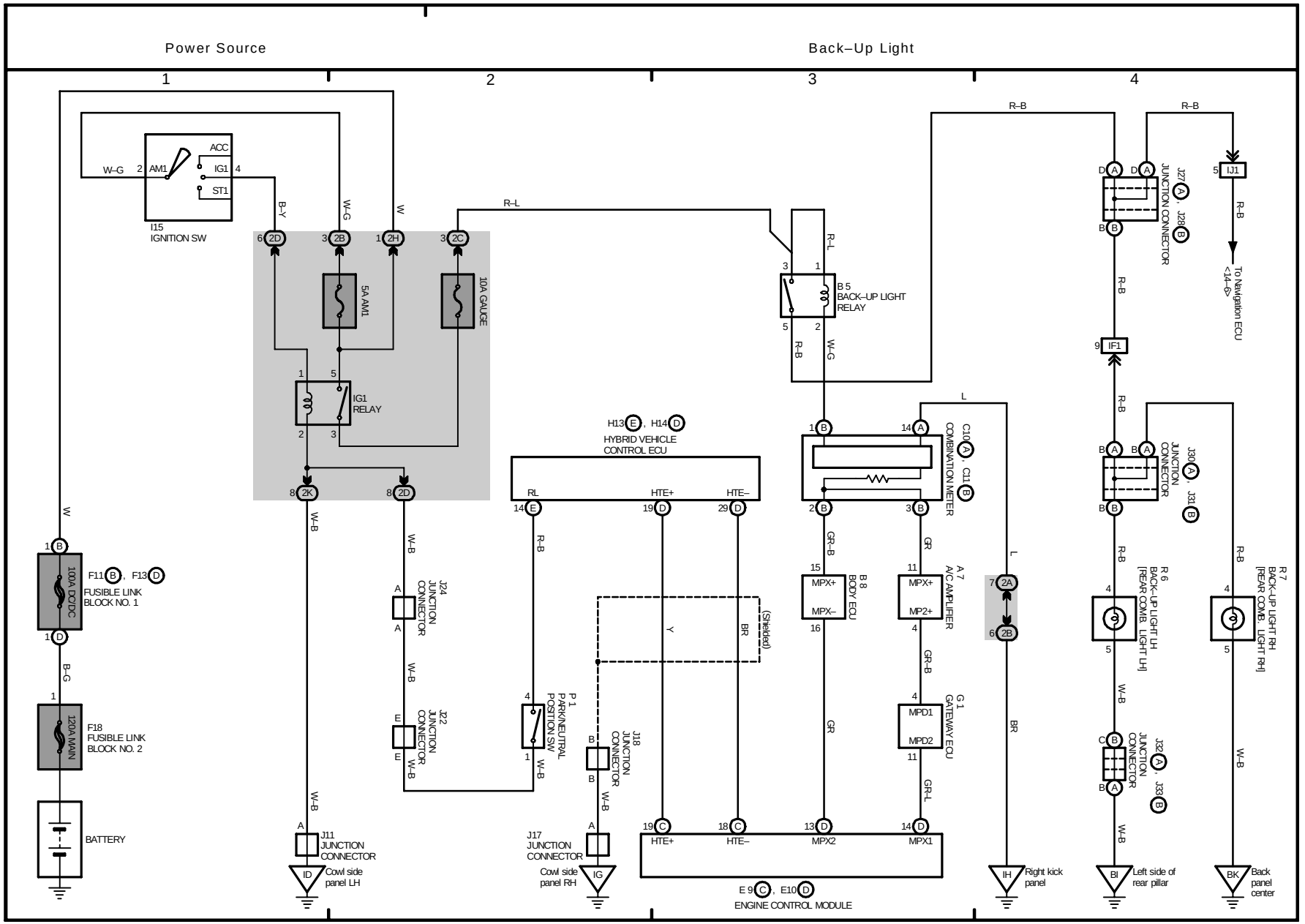
Power Source
Back–Up Light
1
2
3
4
I15
IGNITION SW
ACC
AM1
IG1
ST1
W–G
B–Y
W
R–L
5A AM1
10A GAUGE
IG1
RELAY
B 5
BACK–UP LIGHT
RELAY
R–B
W–G
L
C10 A, C11 B
COMBINATION METER
H13 E, H14 D
HYBRID VEHICLE
CONTROL ECU
RL
HTE+
HTE–
F11 B, F13 D
100A DC/DC
FUSIBLE LINK
BLOCK NO. 1
F18
FUSIBLE LINK
BLOCK NO. 2
120A MAIN
BATTERY
J11
JUNCTION
CONNECTOR
Cowl side
panel LH
J24
JUNCTION
CONNECTOR
J22
JUNCTION
CONNECTOR
P 1
PARK/NEUTRAL
POSITION SW
J18
JUNCTION
CONNECTOR
J17
JUNCTION
CONNECTOR
Cowl side
panel RH
(Shielded)
B 8
BODY ECU
MPX+
MPX–
A 7
A/C AMPLIFIER
MP2+
G 1
GATEWAY ECU
MPD1
MPD2
MPX2
MPX1
E 9 C, E10 D
ENGINE CONTROL MODULE
Right kick
panel
J27 A, J28 B
JUNCTION CONNECTOR
IJ1
To Navigation ECU
<14–6>
IF1
J30 A, J31 B
JUNCTION
CONNECTOR
R 6
BACK–UP LIGHT LH
[REAR COMB. LIGHT LH]
R 7
BACK–UP LIGHT RH
[REAR COMB. LIGHT RH]
J32 A, J33 B
JUNCTION
CONNECTOR
Left side of
rear pillar
Back
panel
center

M OVERALL ELECTRICAL WIRING DIAGRAM

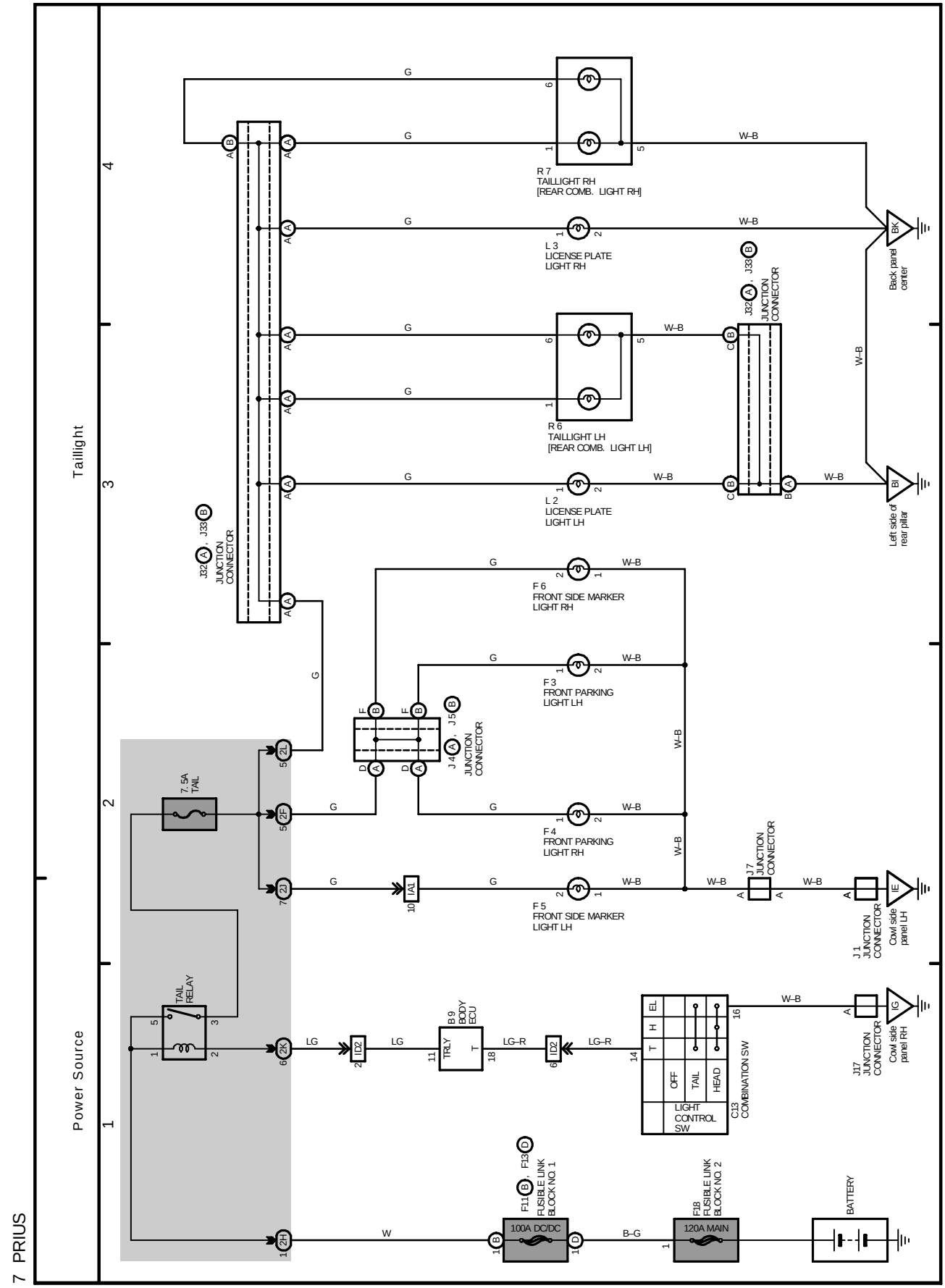

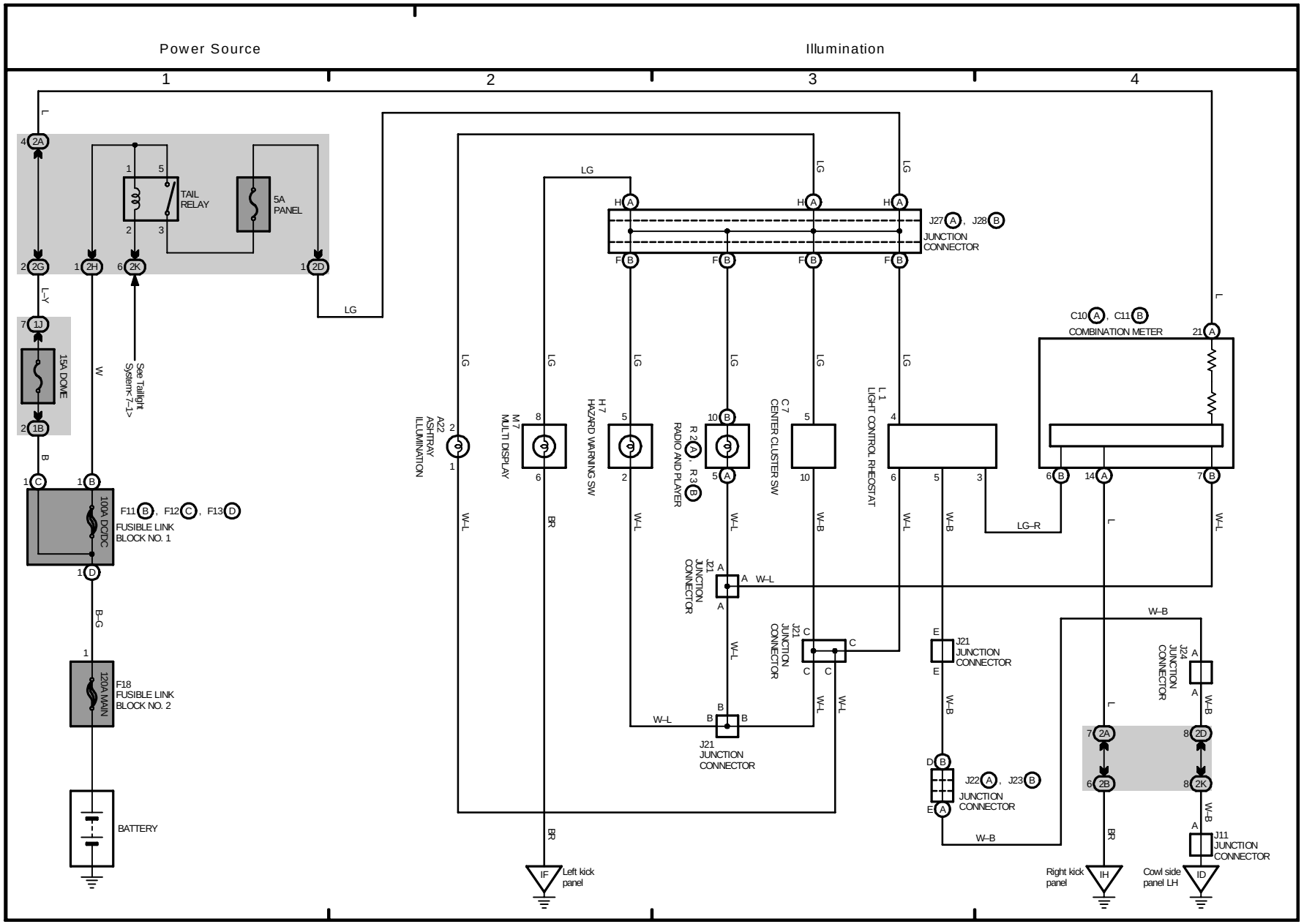
Power Source
Illumination
1
2
3
4
TAIL RELAY
5A PANEL
15A DOME
See Taillight System<7-1>
100A DC/DC
F11 B , F12 C , F13 D
FUSIBLE LINK BLOCK NO. 1
120A MAIN
F18
FUSIBLE LINK BLOCK NO. 2
BATTERY
A22 ASHTRAY ILLUMINATION
M7 MULTI DISPLAY
H7 HAZARD WARNING SW
R 2 , R 3 RADIO AND PLAYER
C7 CENTER CLUSTER SW
L1 LIGHT CONTROL RHEOSTAT
J27 A , J28 B JUNCTION CONNECTOR
C10 A , C11 B COMBINATION METER
J21 JUNCTION CONNECTOR
J22 A , J23 B JUNCTION CONNECTOR
J24 JUNCTION CONNECTOR
J11 JUNCTION CONNECTOR
Left kick panel
Right kick panel
Cowl side panel LH
IF
IH
ID
LG
L
L-Y
W
B
B-G
W-L
W-B
LG-R
BR

M OVERALL ELECTRICAL WIRING DIAGRAM

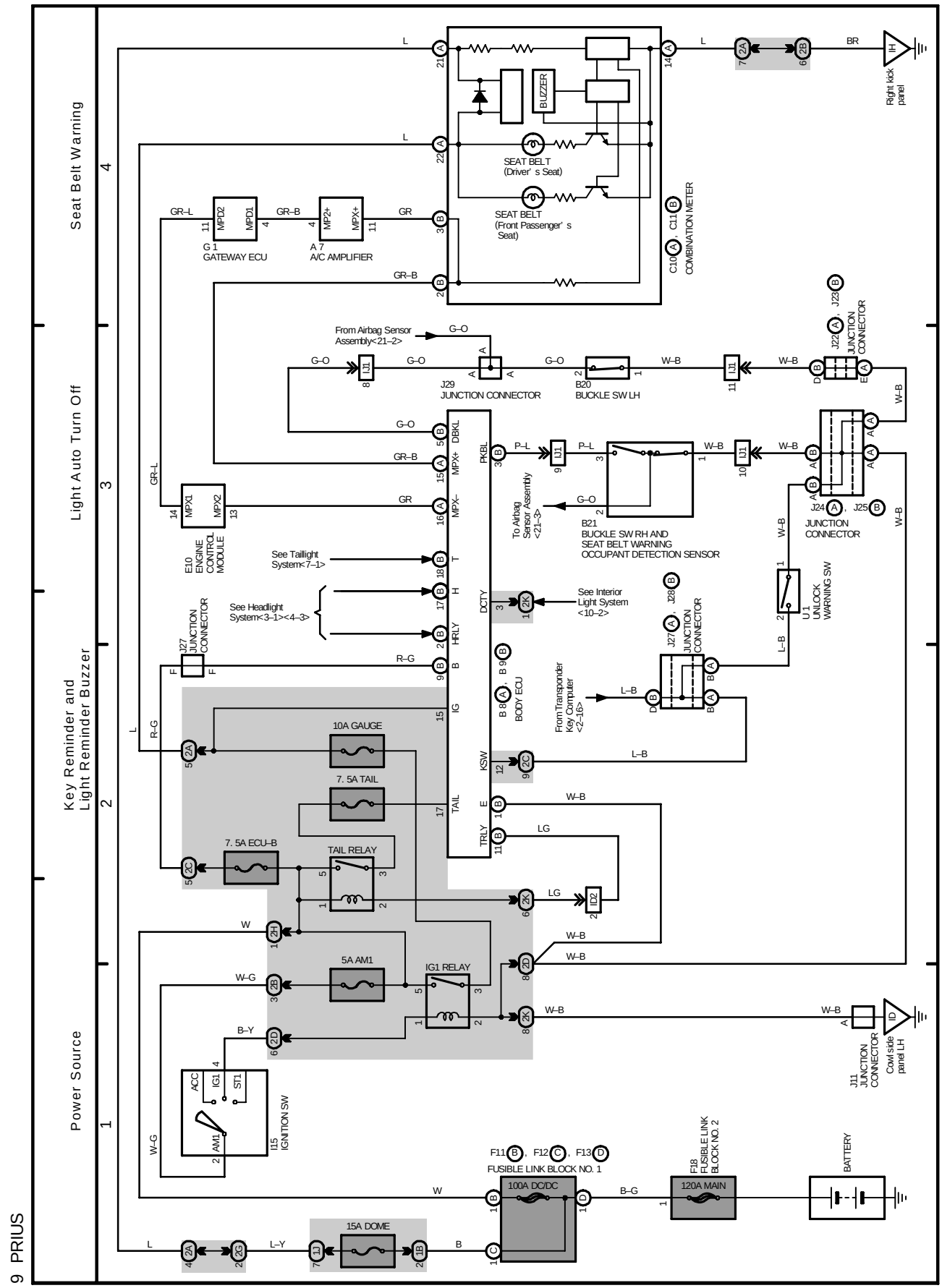

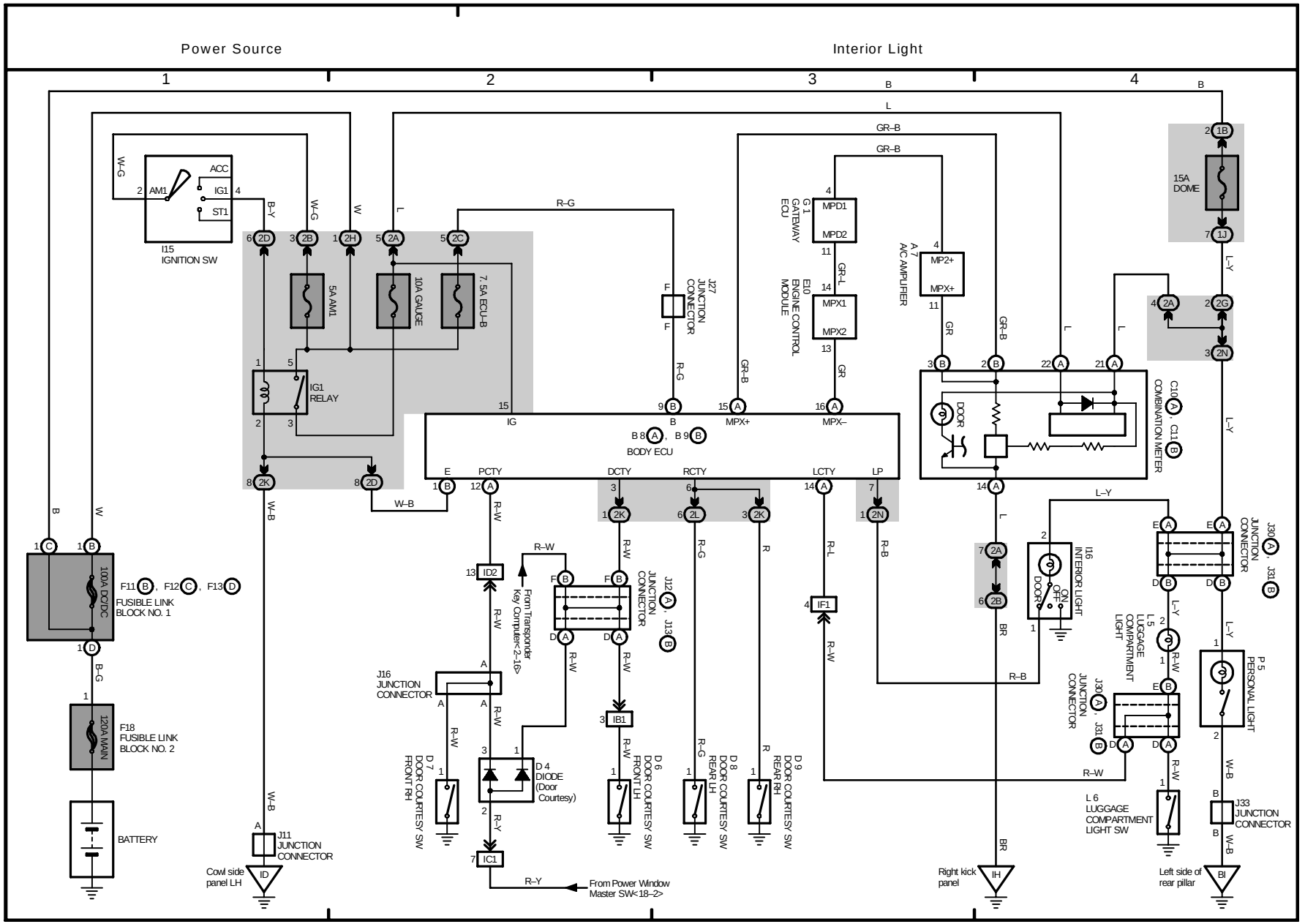
Power Source
Interior Light
1
2
3
4
I15 IGNITION SW
ACC
AM1
IG1
ST1
5A AM1
10A GAUGE
7.5A ECU-B
IG1 RELAY
J27 JUNCTION CONNECTOR
G1 GATEWAY ECU
E10 ENGINE CONTROL MODULE
A7 A/C AMPLIFIER
MPD1
MPD2
MPX1
MPX2
MP2+
MPX+
IG
MPX+
MPX–
B 8 , B 9
BODY ECU
PCTY
DCTY
RCTY
LCTY
LP
15A DOME
DOOR
C10 , C11
COMBINATION METER
I16 INTERIOR LIGHT
DOOR
ON
OFF
J30 , J31
JUNCTION CONNECTOR
L 5 LUGGAGE COMPARTMENT LIGHT
P 5 PERSONAL LIGHT
L 6 LUGGAGE COMPARTMENT LIGHT SW
J33 JUNCTION CONNECTOR
100A DC/DC
F11 , F12 , F13
FUSIBLE LINK BLOCK NO. 1
120A MAIN
F18 FUSIBLE LINK BLOCK NO. 2
BATTERY
J11 JUNCTION CONNECTOR
Cowl side panel LH
J16 JUNCTION CONNECTOR
From Transponder Key Computer<2–16>
J12 , J13
J16 JUNCTION CONNECTOR
D 4 DIODE (Door Courtesy)
D 7 DOOR COURTESY SW FRONT RH
D 6 DOOR COURTESY SW FRONT LH
D 8 DOOR COURTESY SW REAR LH
D 9 DOOR COURTESY SW REAR RH
From Power Window Master SW<18–2>
Right kick panel
Left side of rear pillar

M OVERALL ELECTRICAL WIRING DIAGRAM

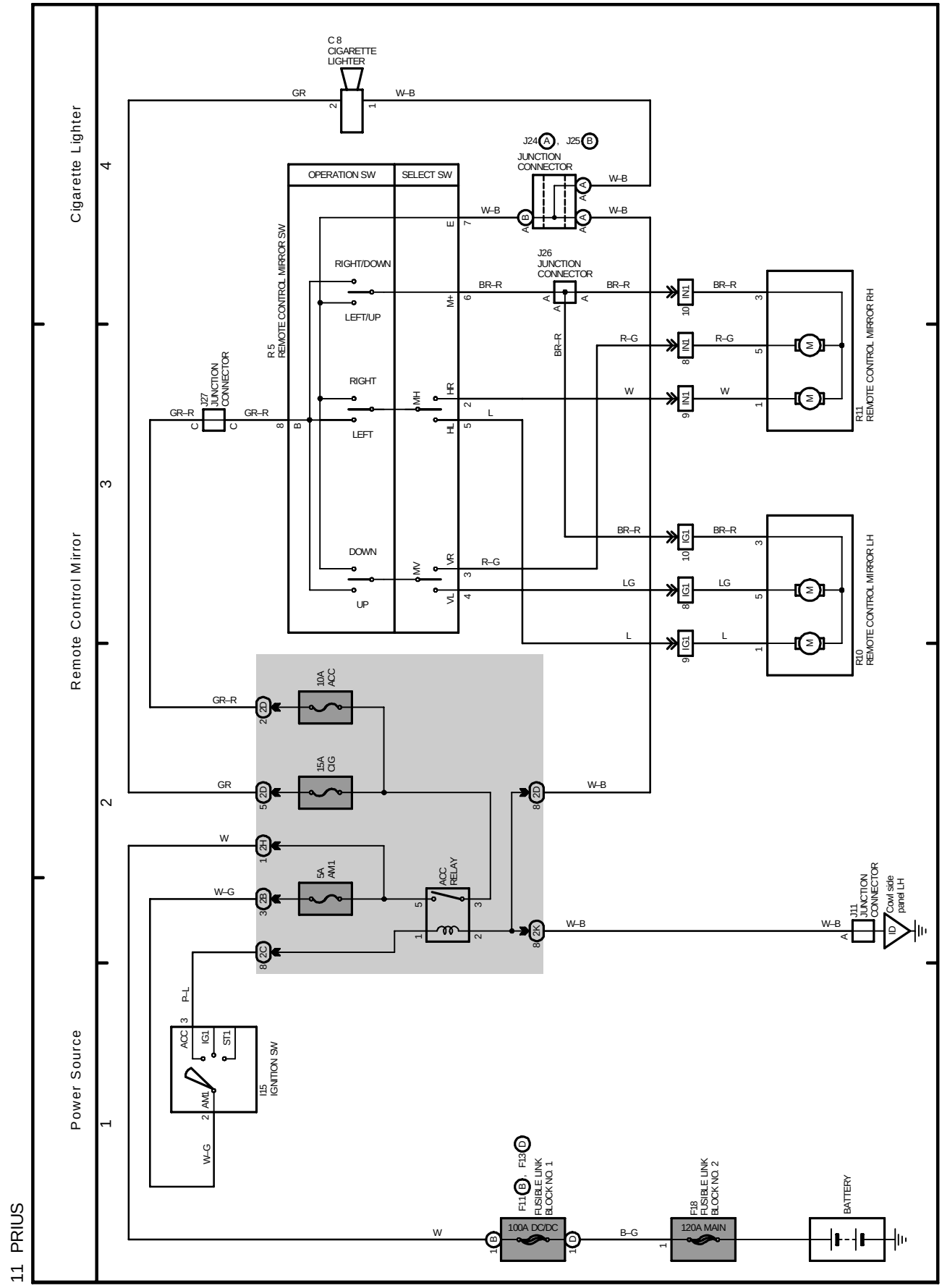

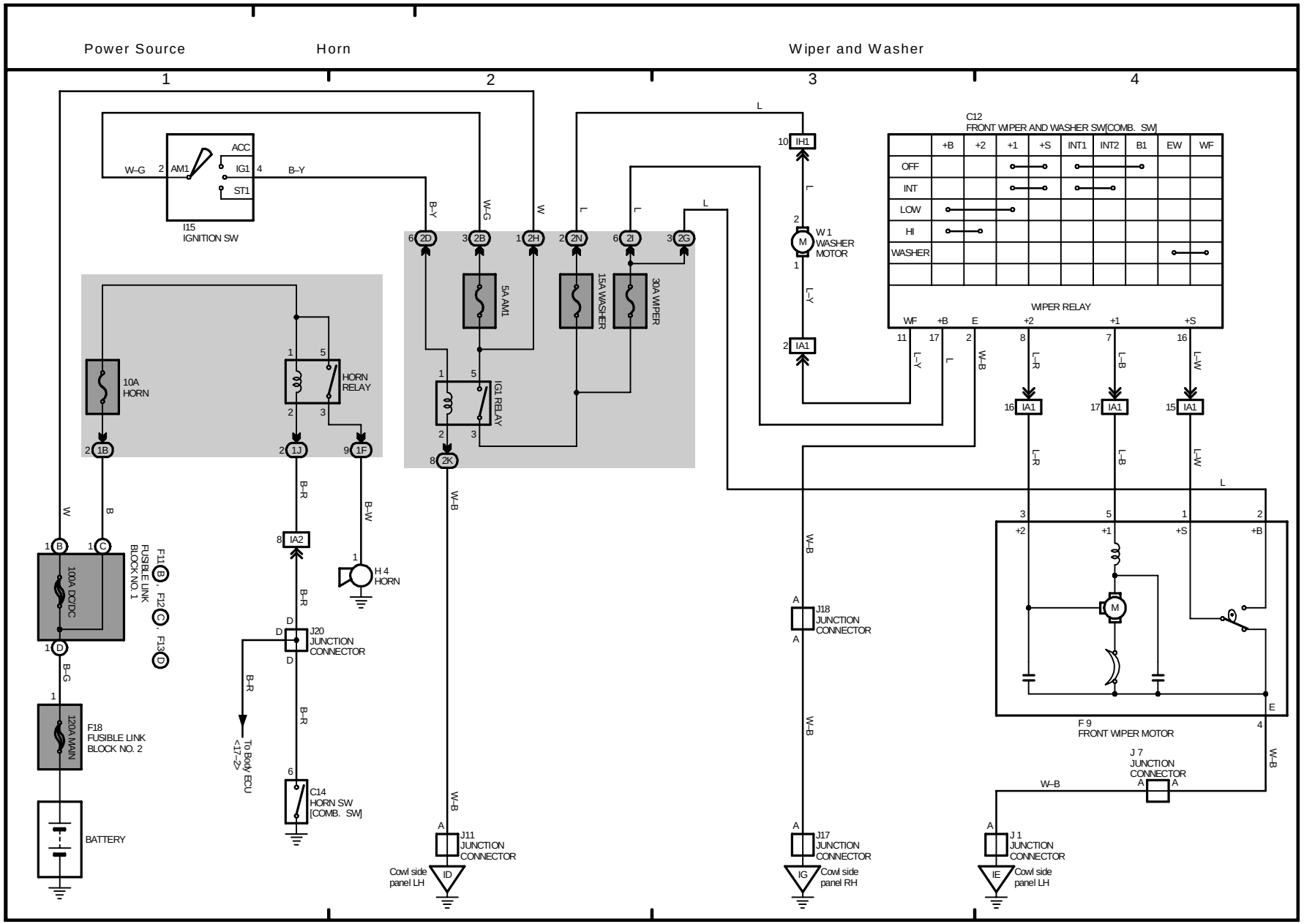
Power Source
Horn
Wiper and Washer
1
2
3
4
ACC
IG1
ST1
AM1
W–G
B–Y
I15
IGNITION SW
10A
HORN
HORN
RELAY
5A AM1
IG1 RELAY
15A WASHER
30A WIPER
H 4
HORN
100A DC/DC
FUSIBLE LINK
BLOCK NO. 1
F11
F12
F13
120A MAIN
F18
FUSIBLE LINK
BLOCK NO. 2
BATTERY
J20
JUNCTION
CONNECTOR
To Body ECU
<17–2>
C14
HORN SW
[COMB. SW]
J11
JUNCTION
CONNECTOR
Cowl side
panel LH
W 1
WASHER
MOTOR
C12
FRONT WIPER AND WASHER SW[COMB. SW]
+B
+2
+1
+S
INT1
INT2
B1
EW
WF
OFF
INT
LOW
HI
WASHER
WIPER RELAY
J18
JUNCTION
CONNECTOR
J17
JUNCTION
CONNECTOR
Cowl side
panel RH
F 9
FRONT WIPER MOTOR
J 7
JUNCTION
CONNECTOR
J 1
JUNCTION
CONNECTOR
Cowl side
panel LH

M OVERALL ELECTRICAL WIRING DIAGRAM

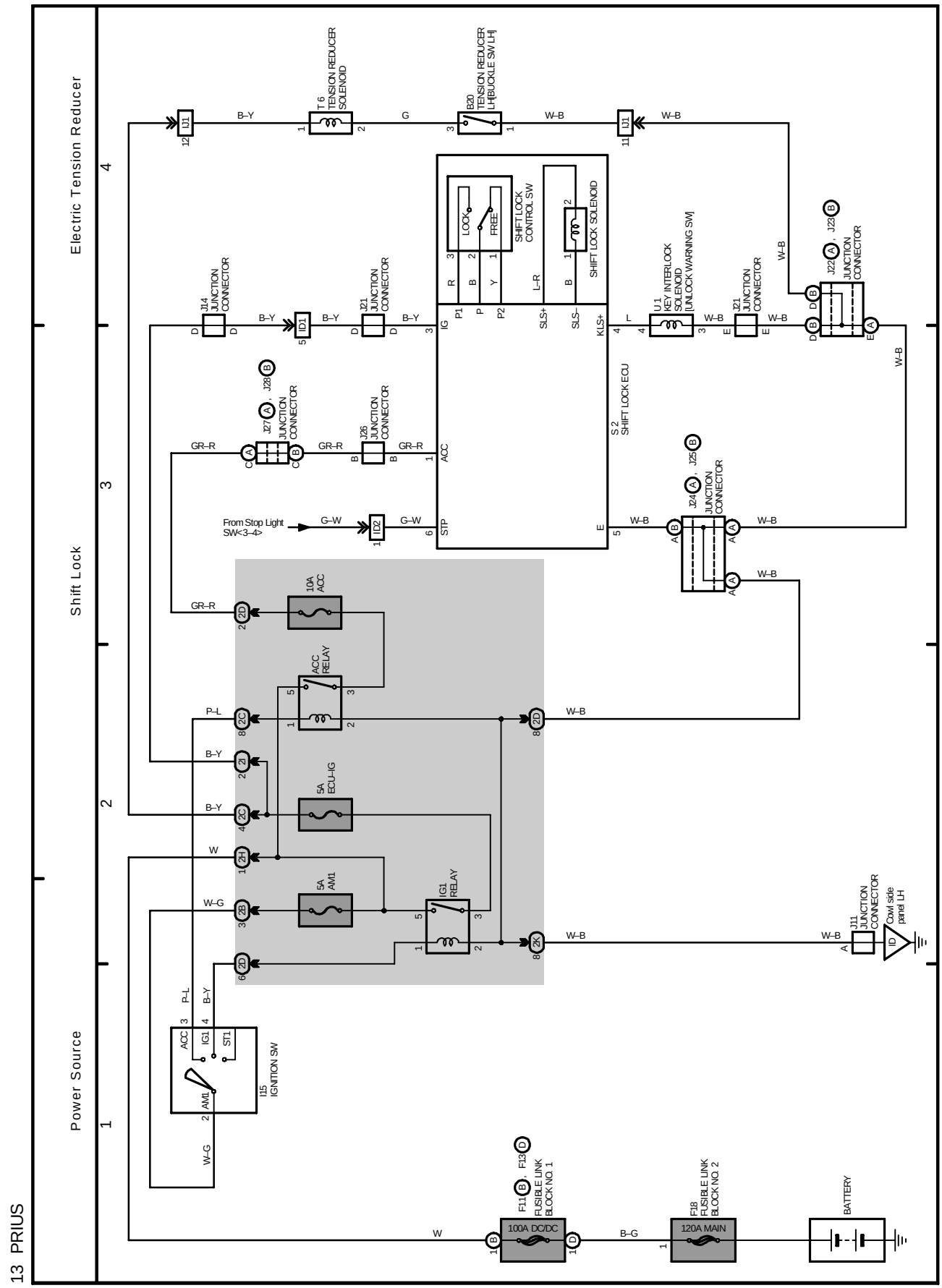

M OVERALL ELECTRICAL WIRING DIAGRAM

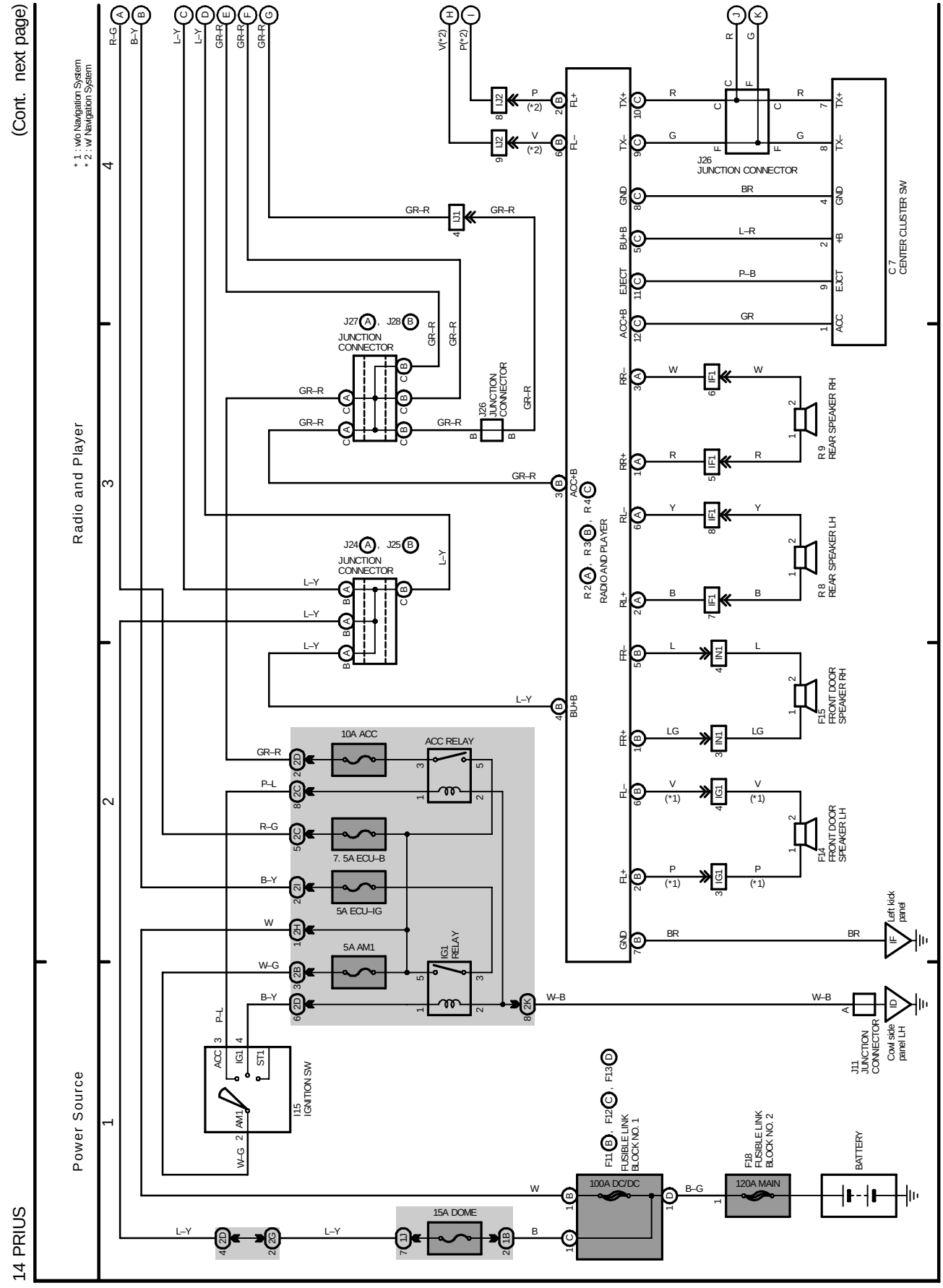

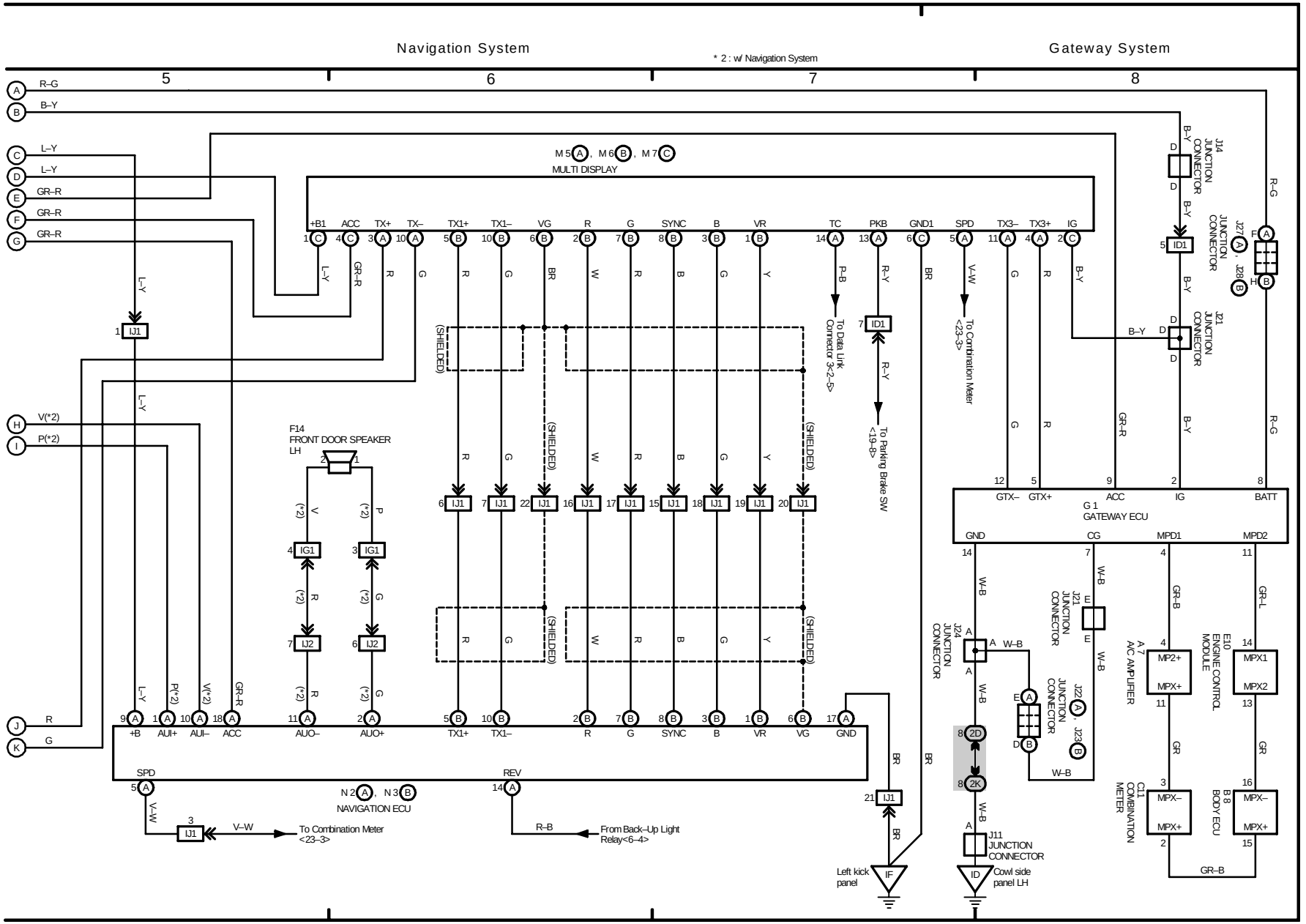
Navigation System
* 2 : w/ Navigation System
Gateway System
5
6
7
8
M 5 A , M 6 B , M 7 C
MULTI DISPLAY
+B1 ACC TX+ TX– TX1+ TX1– VG R G SYNC B VR TC PKB GND1 SPD TX3– TX3+ IG
To Data Link Connector 3<2–5>
To Parking Brake SW <19–8>
To Combination Meter <23–3>
F14
FRONT DOOR SPEAKER LH
(SHIELDED)
IJ1
IJ2
IG1
+B AUI+ AUI– ACC AUO– AUO+ TX1+ TX1– R G SYNC B VR VG GND
SPD
REV
N 2 A , N 3 B
NAVIGATION ECU
To Combination Meter <23–3>
From Back–Up Light Relay<6–4>
Left kick panel
IF
ID
Cowl side panel LH
J14 JUNCTION CONNECTOR
J27 A , J28 B
J21 JUNCTION CONNECTOR
ID1
G 1
GATEWAY ECU
GTX– GTX+ ACC IG BATT
GND CG MPD1 MPD2
J24 JUNCTION CONNECTOR
J11 JUNCTION CONNECTOR
J22 A , J23 B
A 7
A/C AMPLIFIER
MP2+ MPX+ MPX– MPX1 MPX2
E10
ENGINE CONTROL MODULE
C11
COMBINATION METER
B18
BODY ECU

M OVERALL ELECTRICAL WIRING DIAGRAM

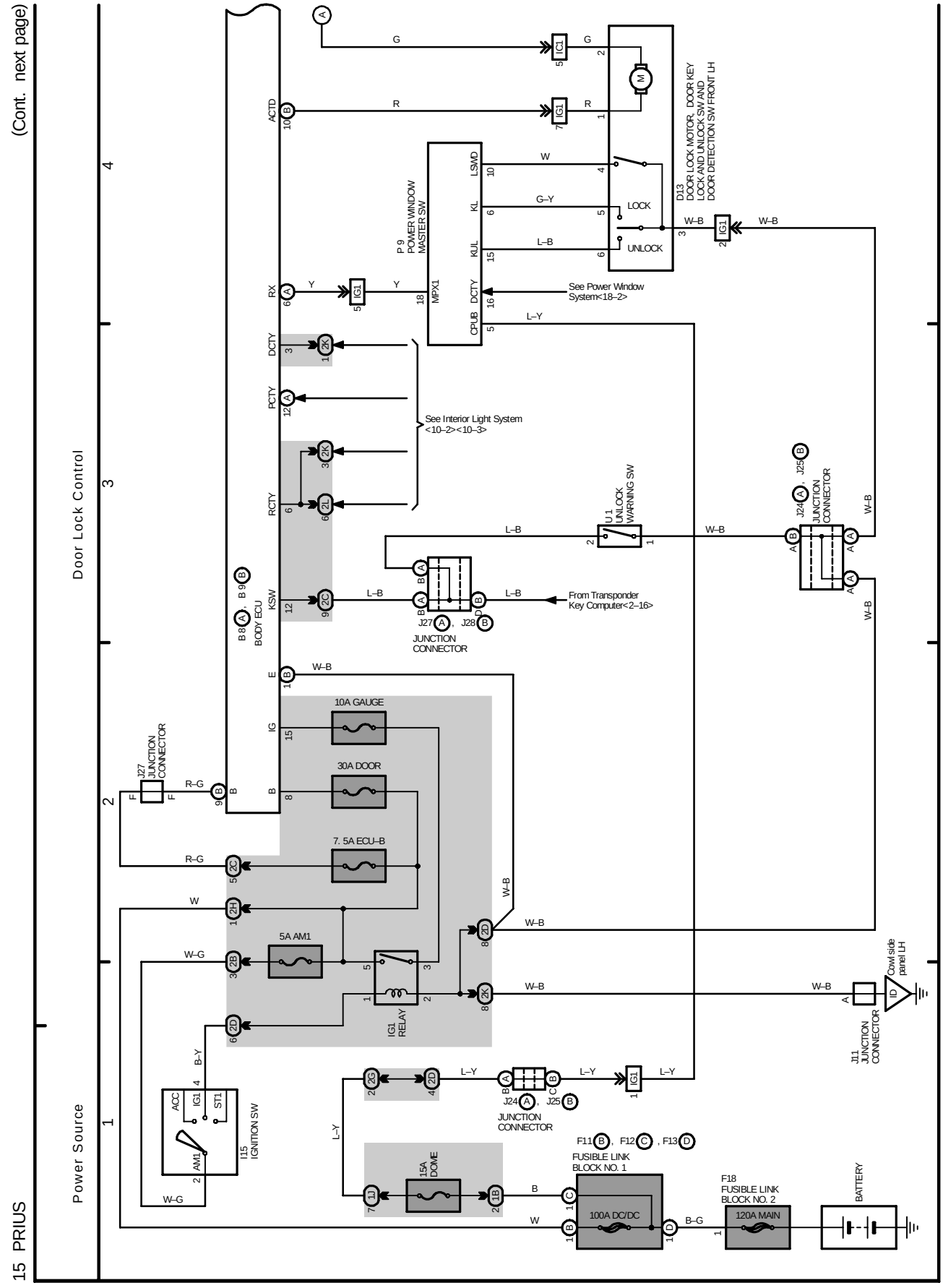

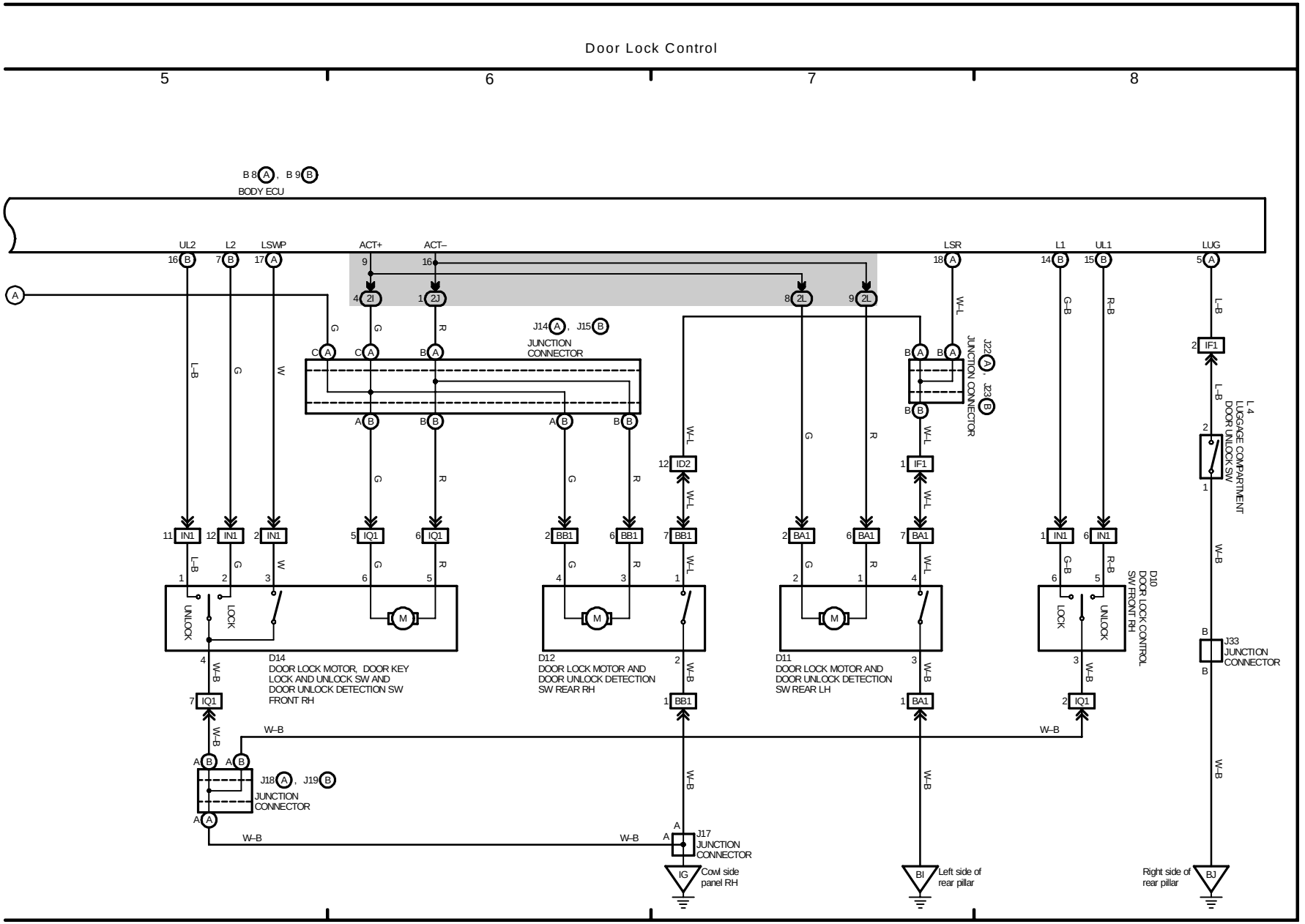
Door Lock Control
5
6
7
8
B 8 A , B 9 B
BODY ECU
UL2
L2
LSWP
ACT+
ACT–
LSR
L1
UL1
LUG
16 B
7 B
17 A
9
16
18 A
14 B
15 B
5 A
4 2I
1 2J
8 2L
9 2L
L–B
G
W
G
R
W–L
G–B
R–B
L–B
J14 A , J15 B
JUNCTION CONNECTOR
J22 , J23
JUNCTION CONNECTOR
2 IF1
L 4
LUGGAGE COMPARTMENT DOOR UNLOCK SW
W–B
J33
JUNCTION CONNECTOR
12 ID2
1 IF1
11 IN1
12 IN1
2 IN1
5 IQ1
6 IQ1
2 BB1
6 BB1
7 BB1
2 BA1
6 BA1
7 BA1
1 IN1
6 IN1
UNLOCK
LOCK
M
D14
DOOR LOCK MOTOR, DOOR KEY LOCK AND UNLOCK SW AND DOOR UNLOCK DETECTION SW FRONT RH
D12
DOOR LOCK MOTOR AND DOOR UNLOCK DETECTION SW REAR RH
D11
DOOR LOCK MOTOR AND DOOR UNLOCK DETECTION SW REAR LH
D10
DOOR LOCK CONTROL SW FRONT RH
7 IQ1
1 BB1
1 BA1
2 IQ1
W–B
J18 A , J19 B
JUNCTION CONNECTOR
J17
JUNCTION CONNECTOR
IG
Cowl side panel RH
BI
Left side of rear pillar
BJ
Right side of rear pillar

M OVERALL ELECTRICAL WIRING DIAGRAM

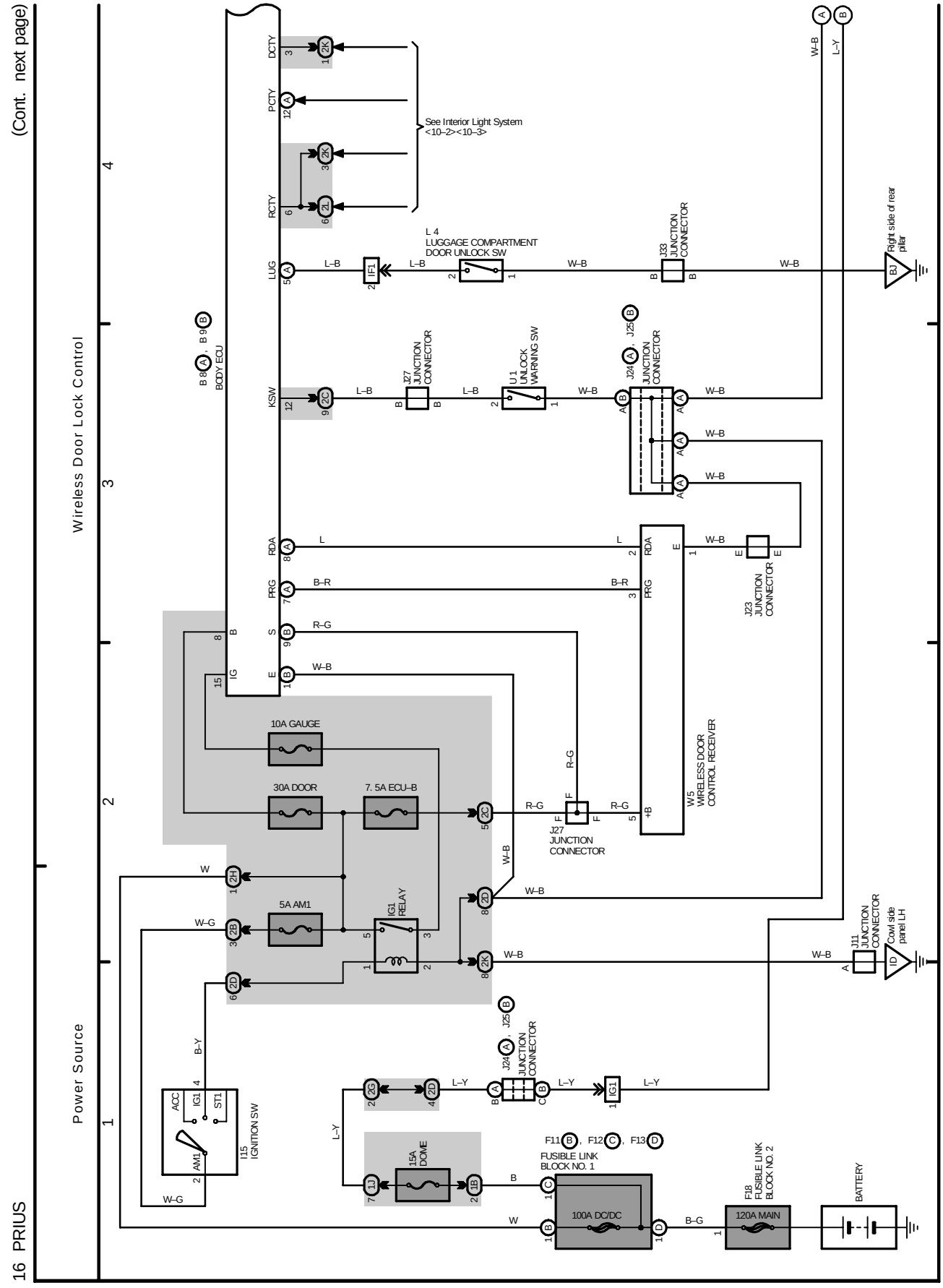

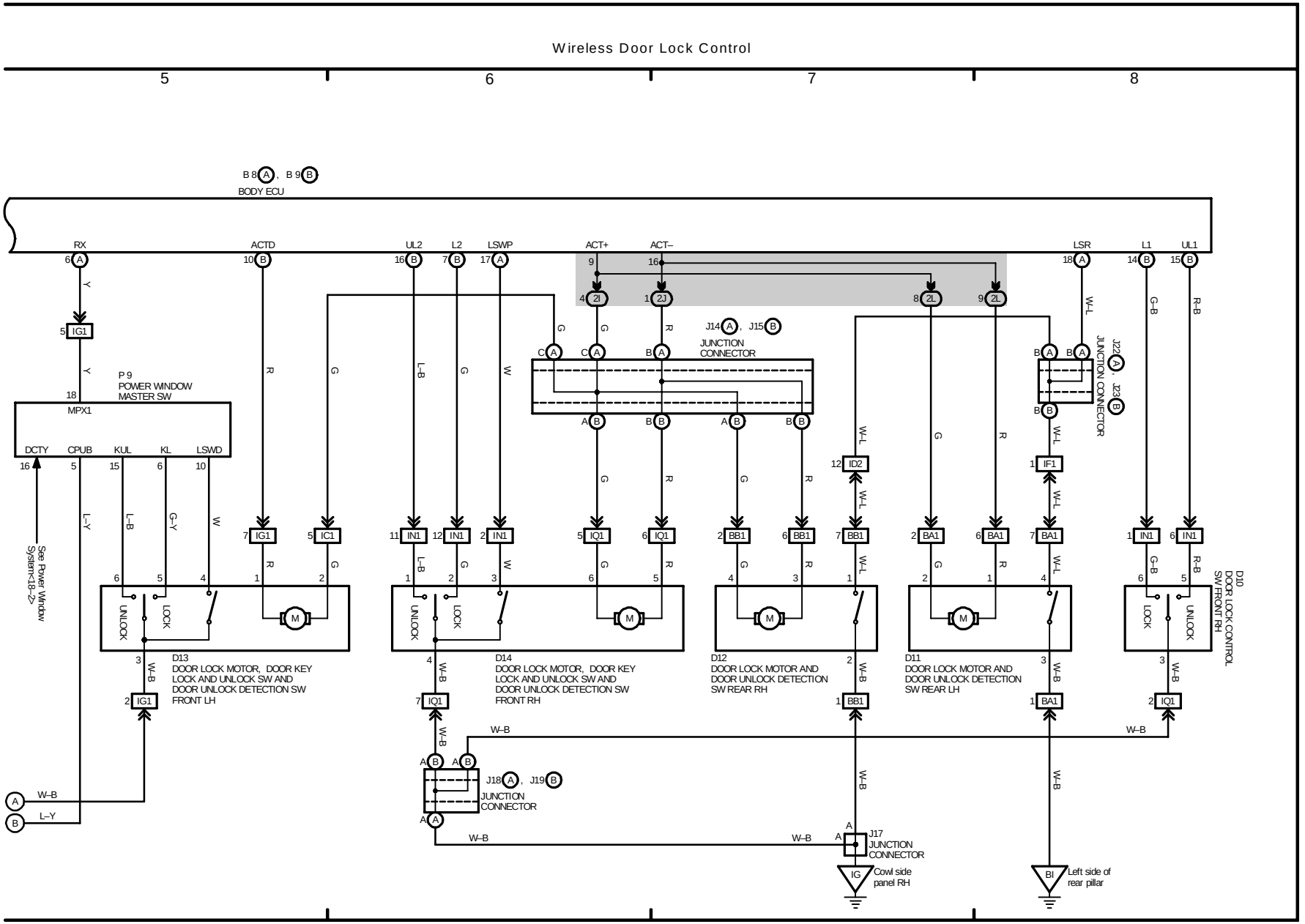
Wireless Door Lock Control
5
6
7
8
B 8 A , B 9 B
BODY ECU
RX
ACTD
UL2
L2
LSWP
ACT+
ACT–
LSR
L1
UL1
IG1
P 9
POWER WINDOW
MASTER SW
MPX1
DCTY
CPUB
KUL
KL
LSWD
See Power Window System<18–2>
J14 A , J15 B
JUNCTION
CONNECTOR
J22 A , J23 B
JUNCTION CONNECTOR
D13
DOOR LOCK MOTOR, DOOR KEY
LOCK AND UNLOCK SW AND
DOOR UNLOCK DETECTION SW
FRONT LH
D14
DOOR LOCK MOTOR, DOOR KEY
LOCK AND UNLOCK SW AND
DOOR UNLOCK DETECTION SW
FRONT RH
D12
DOOR LOCK MOTOR AND
DOOR UNLOCK DETECTION
SW REAR RH
D11
DOOR LOCK MOTOR AND
DOOR UNLOCK DETECTION
SW REAR LH
D10
DOOR LOCK CONTROL
SW FRONT RH
J18 A , J19 B
JUNCTION
CONNECTOR
J17
JUNCTION
CONNECTOR
IG
Cowl side
panel RH
BI
Left side of
rear pillar

M OVERALL ELECTRICAL WIRING DIAGRAM

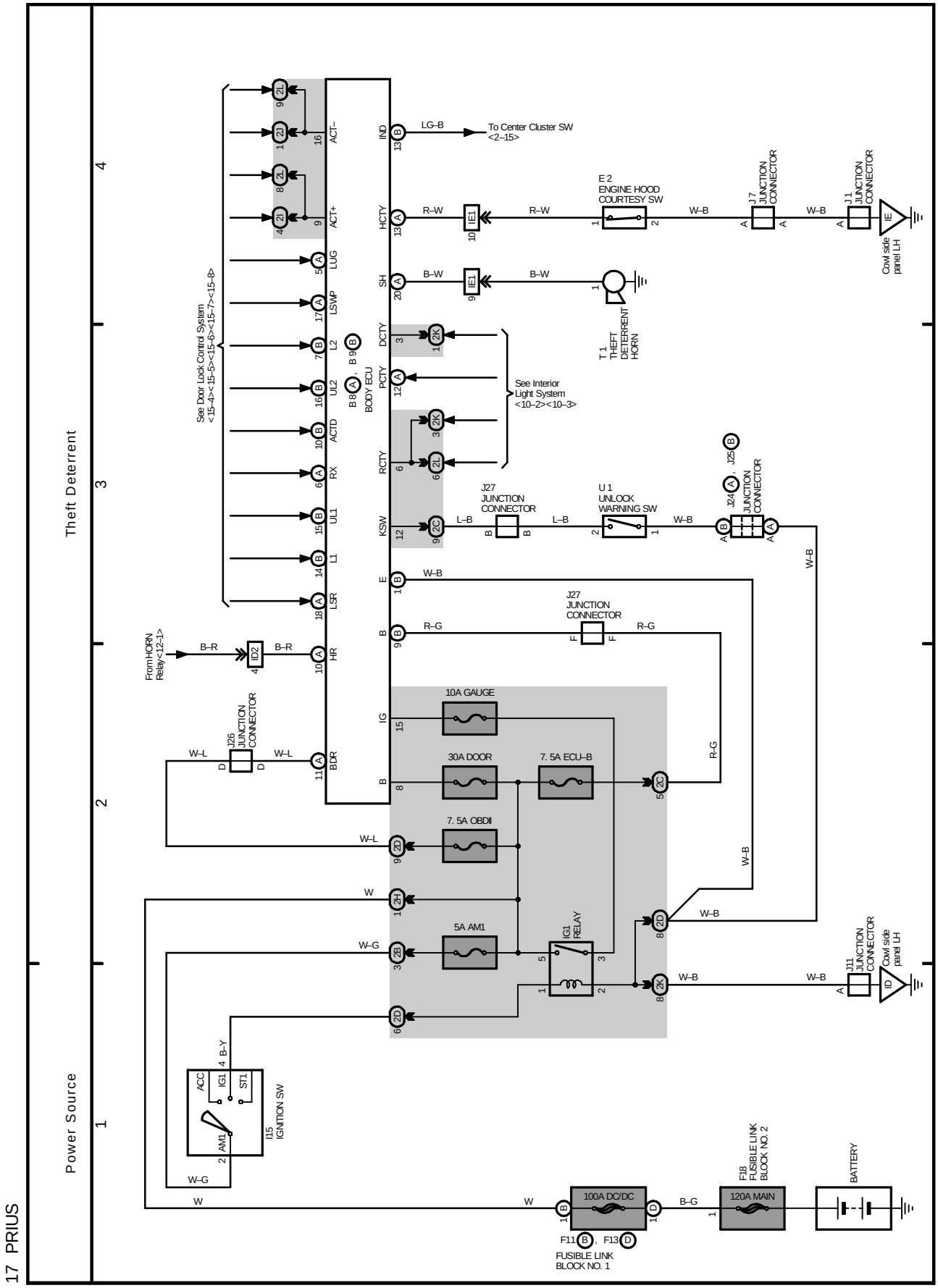

18 PRIUS

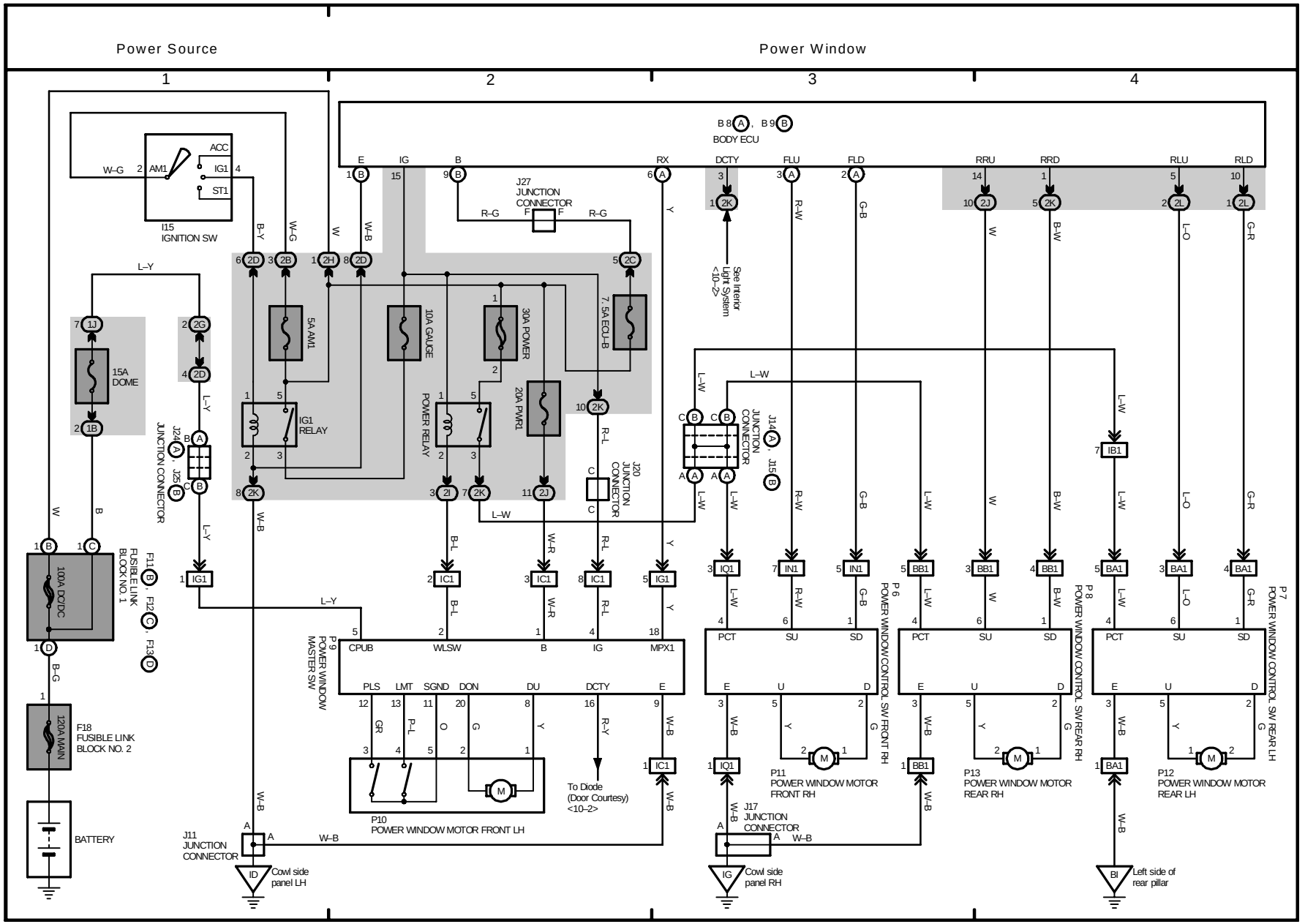
Power Source
Power Window
1
2
3
4
I15
IGNITION SW
ACC
AM1
IG1
ST1
W–G
B8 A, B9 B
BODY ECU
E
IG
B
RX
DCTY
FLU
FLD
RRU
RRD
RLU
RLD
J27
JUNCTION
CONNECTOR
R–G
See Interior
Light System
<10–2>
15A
DOME
5A AM1
10A GAUGE
30A POWER
7. 5A ECU–B
IG1
RELAY
POWER RELAY
20A PWR1
J24 A, J25 B
JUNCTION CONNECTOR
J20
JUNCTION
CONNECTOR
J14 A, J15 B
JUNCTION
CONNECTOR
100A DC/DC
F11 B, F12 C, F13 D
FUSIBLE LINK
BLOCK NO. 1
F18
FUSIBLE LINK
BLOCK NO. 2
120A MAIN
BATTERY
P9
POWER WINDOW
MASTER SW
CPUB
WLSW
B
IG
MPX1
PLS
LMT
SGND
DON
DU
DCTY
E
P10
POWER WINDOW MOTOR FRONT LH
To Diode
(Door Courtesy)
<10–2>
J11
JUNCTION
CONNECTOR
ID
Cowl side
panel LH
P6
POWER WINDOW CONTROL SW FRONT RH
P11
POWER WINDOW MOTOR
FRONT RH
J17
JUNCTION
CONNECTOR
IG
Cowl side
panel RH
P8
POWER WINDOW CONTROL SW REAR RH
P13
POWER WINDOW MOTOR
REAR RH
P7
POWER WINDOW CONTROL SW REAR LH
P12
POWER WINDOW MOTOR
REAR LH
BI
Left side of
rear pillar
PCT
SU
SD
E
U
D

M OVERALL ELECTRICAL WIRING DIAGRAM

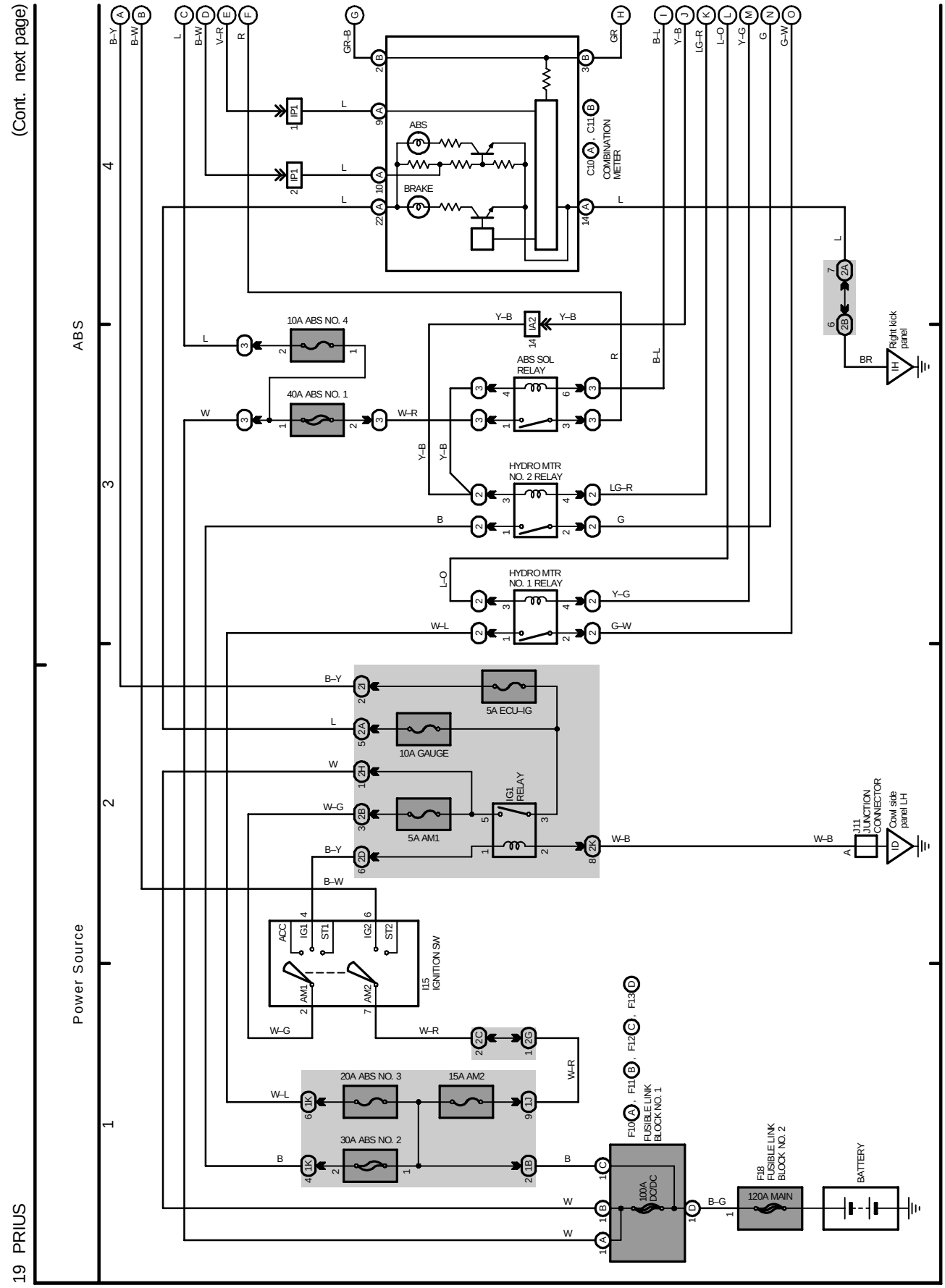

(Cont. next page)

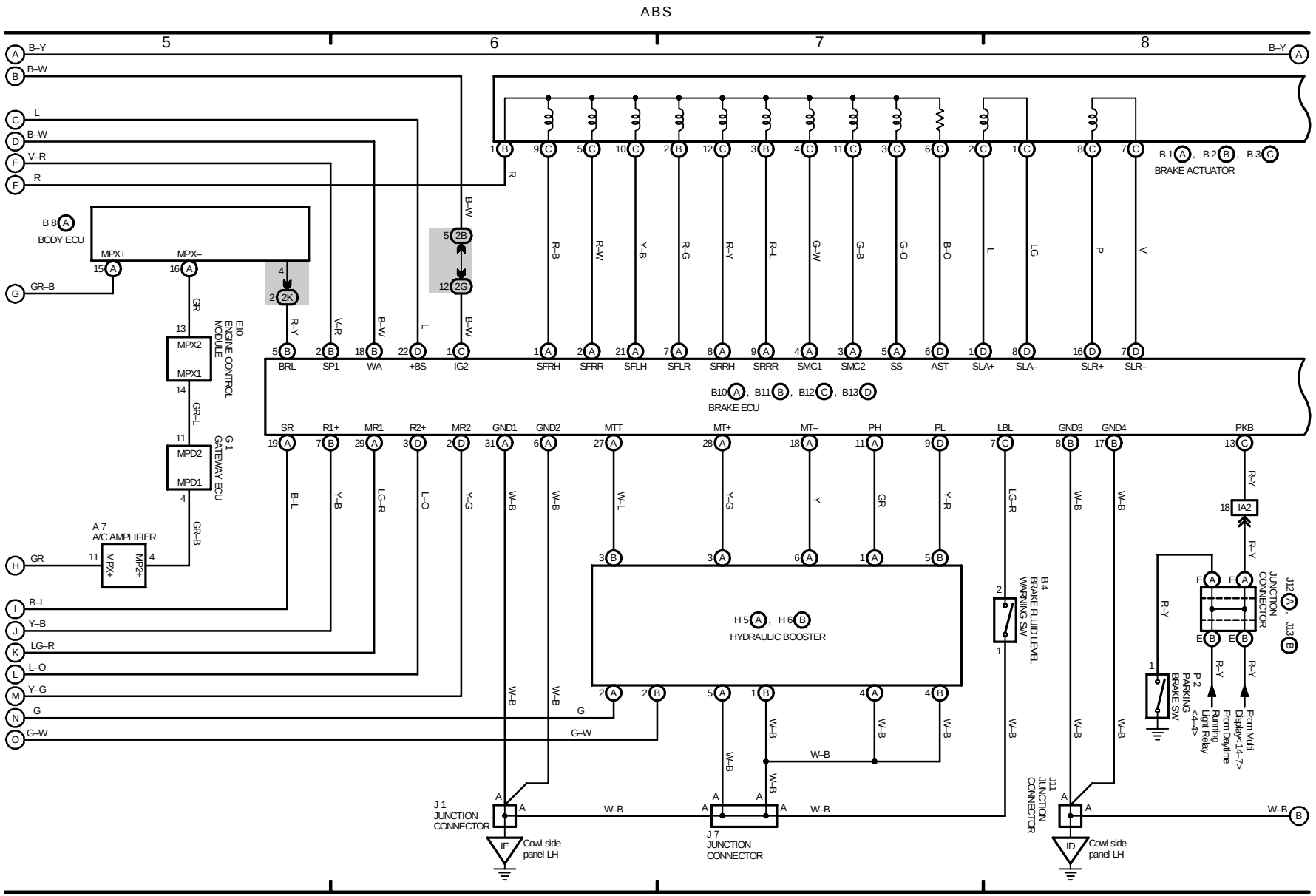

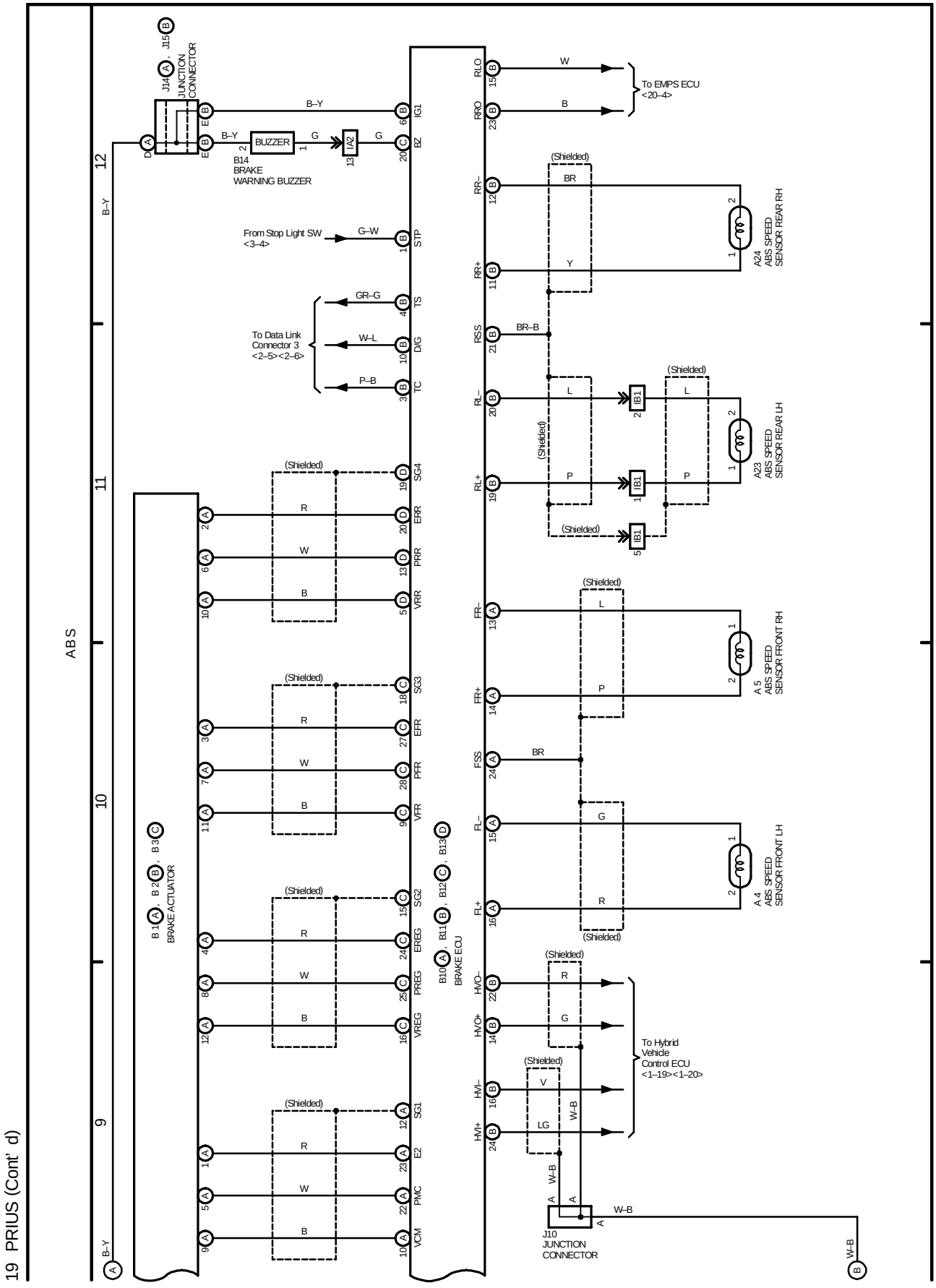
19 PRIUS (Cont' d)
ABS
12
11
10
9
B–Y
J14 (A), J15 (B) JUNCTION CONNECTOR
B–Y
BUZZER
B14 BRAKE WARNING BUZZER
IA2
BZ
From Stop Light SW <3–4>
G–W
STP
To Data Link Connector 3 <2–5><2–6>
GR–G
TS
W–L
D/G
P–B
TC
B 1 (A), B 2 (B), B 3 (C) BRAKE ACTUATOR
B10 (A), B11 (B), B12 (C), B13 (D) BRAKE ECU
SG4
ERR
PRR
VRR
SG3
EFR
PFR
VFR
SG2
EREG
PREG
VREG
SG1
E2
PMC
VCM
RLO
RRO
To EMPS ECU <20–4>
RR–
RR+
RSS
A24 ABS SPEED SENSOR REAR RH
RL–
RL+
IB1
A23 ABS SPEED SENSOR REAR LH
FR–
FR+
FSS
A 5 ABS SPEED SENSOR FRONT RH
FL–
FL+
A 4 ABS SPEED SENSOR FRONT LH
HVO–
HVO+
HV–
HV+
To Hybrid Vehicle Control ECU <1–19><1–20>
J10 JUNCTION CONNECTOR
W–B
(Shielded)

20 PRIUS

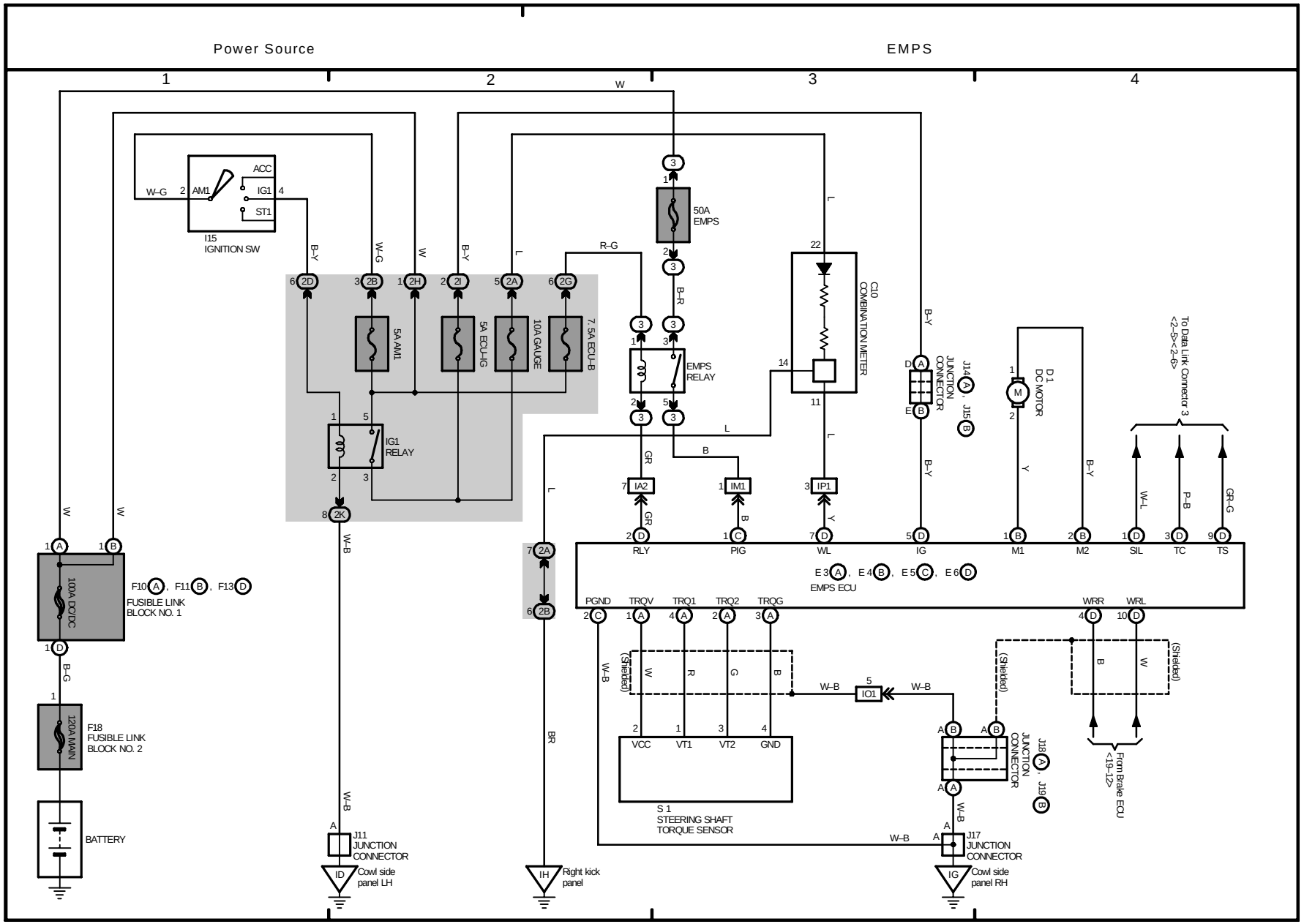
Power Source
EMPS
1
2
3
4
I15
IGNITION SW
ACC
IG1
ST1
AM1
50A
EMPS
5A AM1
5A ECU-IG
10A GAUGE
7. 5A ECU-B
IG1
RELAY
EMPS
RELAY
C10
COMBINATION METER
J14 A, J15 B
JUNCTION
CONNECTOR
D 1
DC MOTOR
To Data Link Connector 3
<2-5><2-6>
IA2
IM1
IP1
RLY
PIG
WL
IG
M1
M2
SIL
TC
TS
E 3 A, E 4 B, E 5 C, E 6 D
EMPS ECU
PGND
TRQV
TRQ1
TRQ2
TRQG
WRR
WRL
(Shielded)
IO1
VCC
VT1
VT2
GND
S 1
STEERING SHAFT
TORQUE SENSOR
J18 A, J19 B
JUNCTION
CONNECTOR
From Brake ECU
<19-12>
J17
JUNCTION
CONNECTOR
Cowl side
panel RH
Right kick
panel
J11
JUNCTION
CONNECTOR
Cowl side
panel LH
100A DC/DC
F10 A, F11 B, F13 D
FUSIBLE LINK
BLOCK NO. 1
120A MAIN
F18
FUSIBLE LINK
BLOCK NO. 2
BATTERY

M OVERALL ELECTRICAL WIRING DIAGRAM

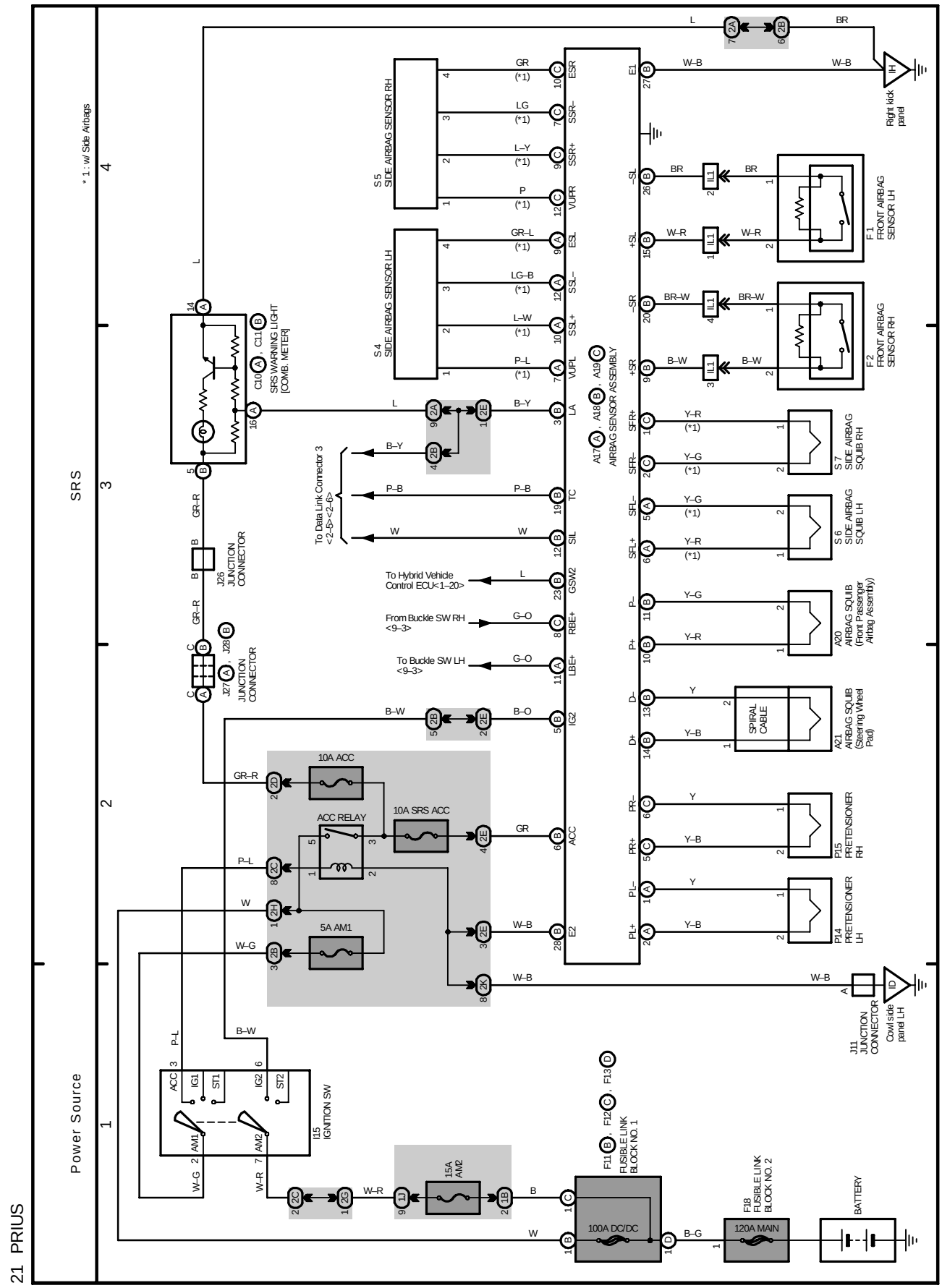

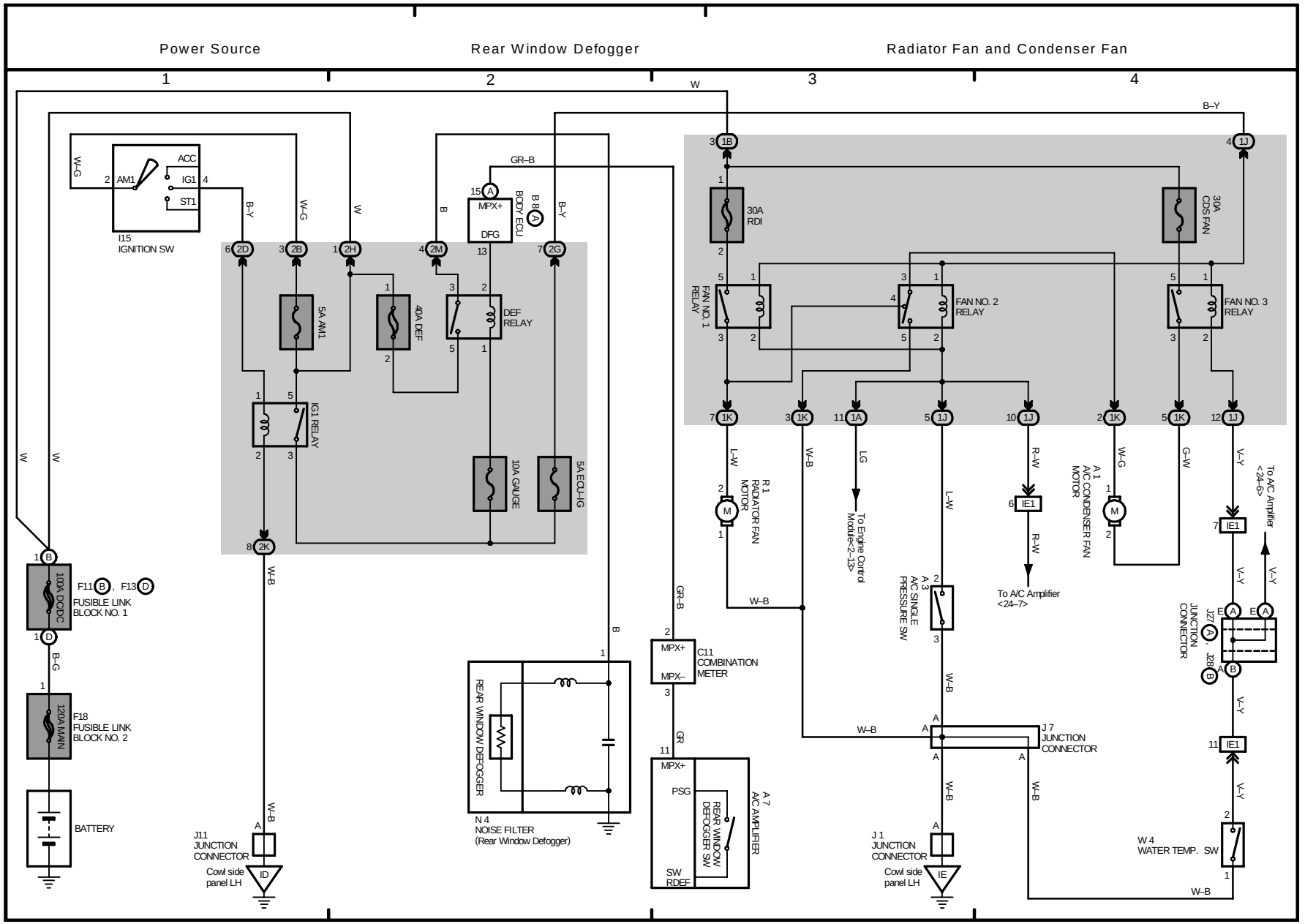
Power Source
Rear Window Defogger
Radiator Fan and Condenser Fan
1
2
3
4
I15
IGNITION SW
ACC
IG1
ST1
AM1
5A AM1
40A DEF
DEF RELAY
IG1 RELAY
10A GAUGE
5A ECU-IG
30A RDI
30A CDS FAN
FAN NO. 1 RELAY
FAN NO. 2 RELAY
FAN NO. 3 RELAY
R 1
RADIATOR FAN MOTOR
A 1
A/C CONDENSER FAN MOTOR
A 3
A/C SINGLE PRESSURE SW
To Engine Control Module<2-13>
To A/C Amplifier <24-6>
To A/C Amplifier <24-7>
100A DC/DC
FUSIBLE LINK BLOCK NO. 1
F11, F13
F18
120A MAIN
FUSIBLE LINK BLOCK NO. 2
BATTERY
J11
JUNCTION CONNECTOR
Cowl side panel LH
REAR WINDOW DEFOGGER
N 4
NOISE FILTER
(Rear Window Defogger)
C11
COMBINATION METER
MPX+
MPX–
BODY ECU
DFG
PSG
SW RDEF
REAR WINDOW DEFOGGER SW
A 7
A/C AMPLIFIER
J 7
JUNCTION CONNECTOR
J 1
JUNCTION CONNECTOR
J27
J28
JUNCTION CONNECTOR
W 4
WATER TEMP. SW

M OVERALL ELECTRICAL WIRING DIAGRAM

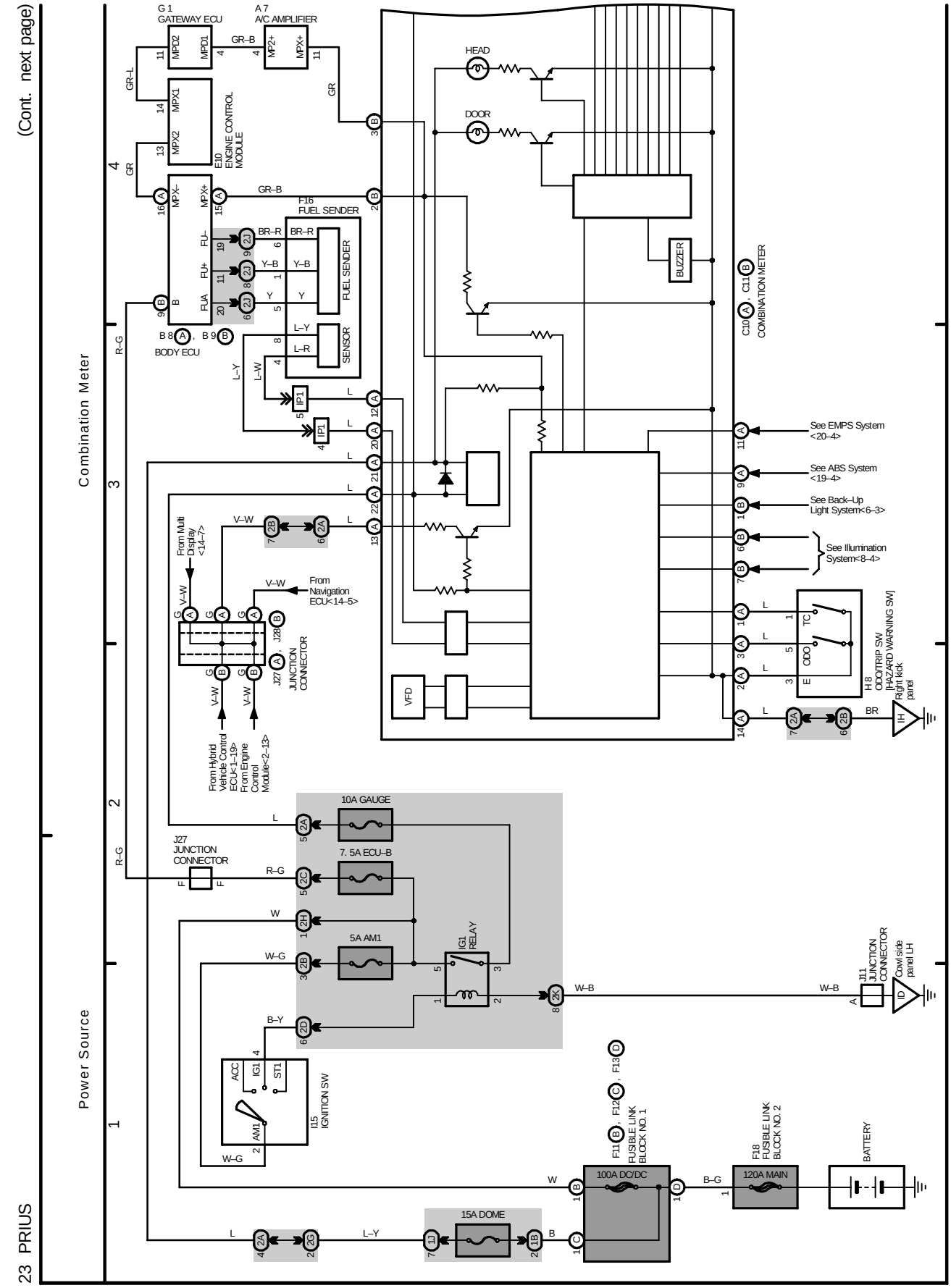

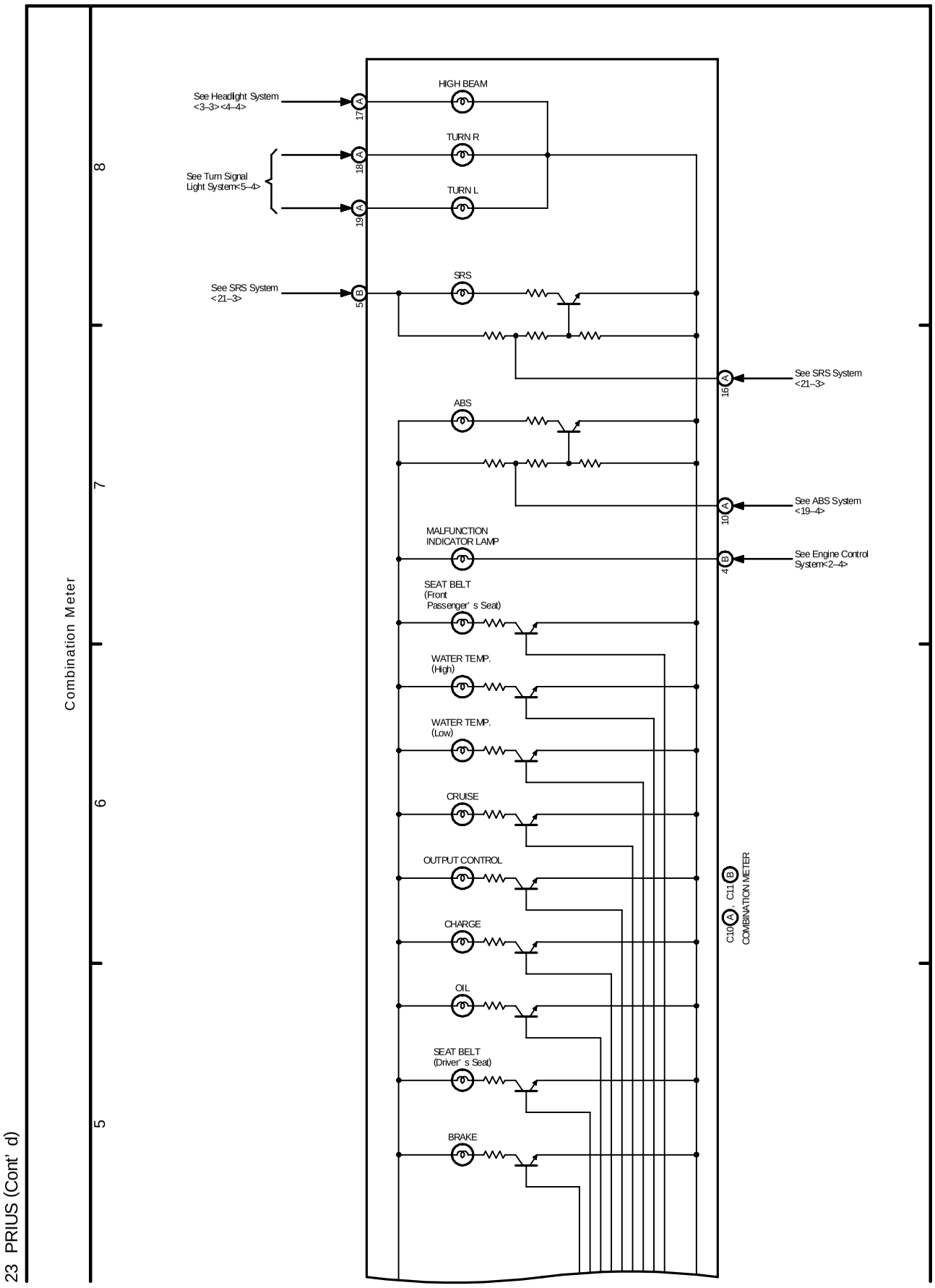
23 PRIUS (Cont' d)
Combination Meter
8
7
6
5
See Headlight System <3–3> <4–4>
See Turn Signal Light System<5–4>
See SRS System <21–3>
17 A
18 A
19 A
5 B
HIGH BEAM
TURN R
TURN L
SRS
ABS
MALFUNCTION INDICATOR LAMP
SEAT BELT (Front Passenger' s Seat)
WATER TEMP. (High)
WATER TEMP. (Low)
CRUISE
OUTPUT CONTROL
CHARGE
OIL
SEAT BELT (Driver' s Seat)
BRAKE
16 A
See SRS System <21–3>
10 A
See ABS System <19–4>
4 B
See Engine Control System<2–4>
C10 A, C11 B
COMBINATION METER

M OVERALL ELECTRICAL WIRING DIAGRAM

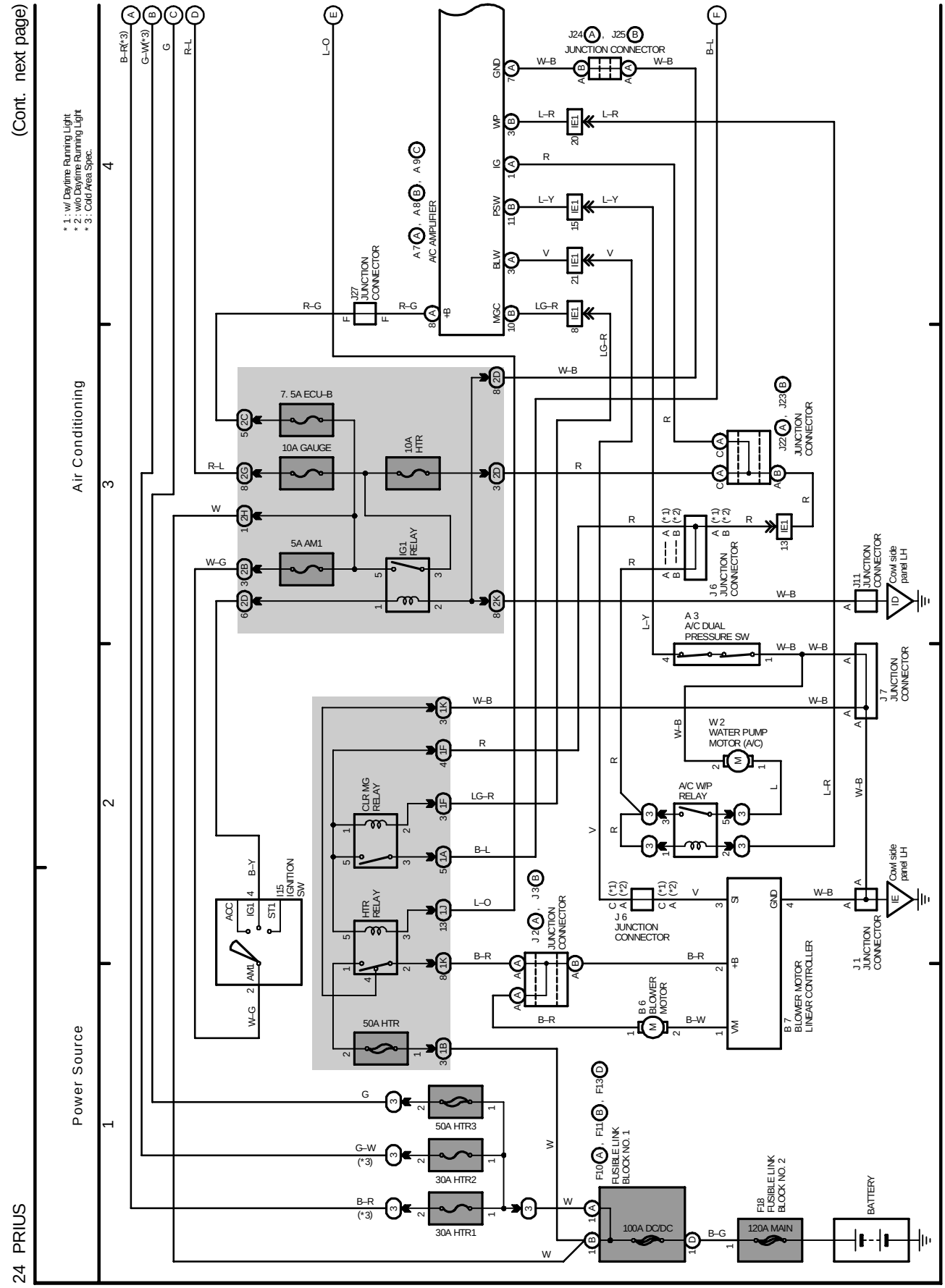

(Cont. next page)

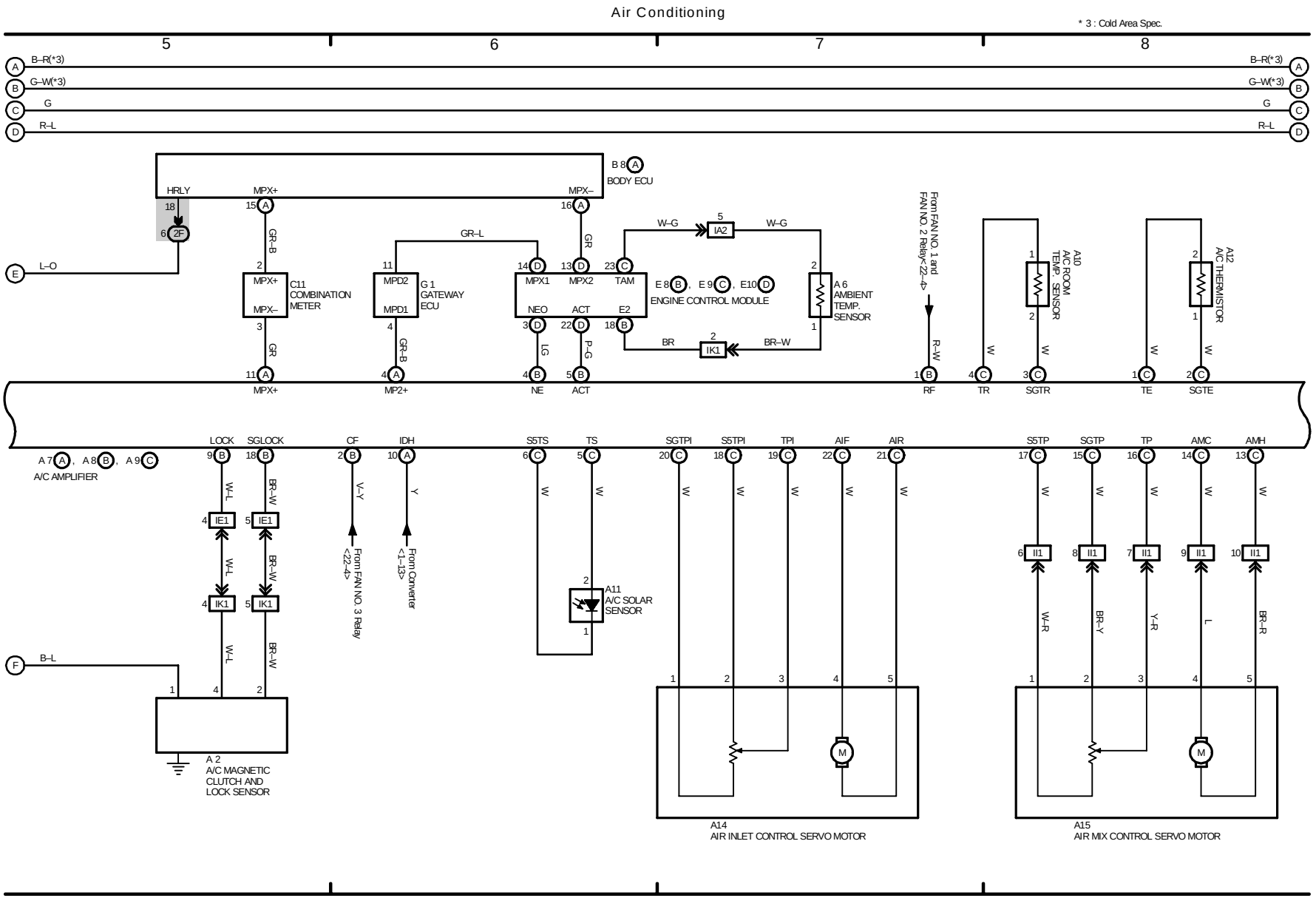

M OVERALL ELECTRICAL WIRING DIAGRAM

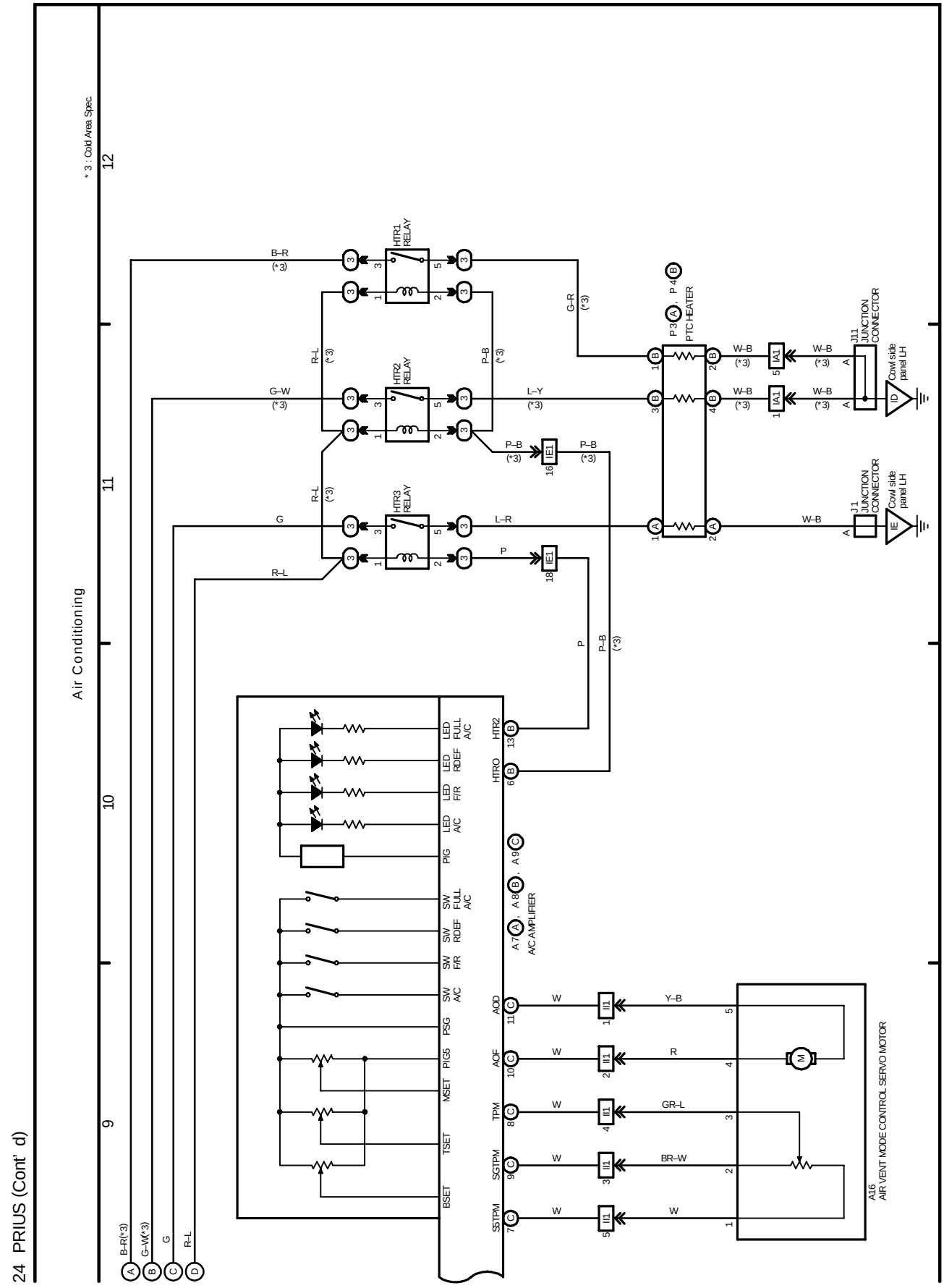

FOREWORD

This wiring diagram manual has been prepared to provide information on the electrical system of the 2002 PRIUS.

Applicable models: NHW11 Series

For service specifications and repair procedures of the above models other than those listed in this manual, refer to the following manuals;

Manual Name	Pub. No.
• 2002 PRIUS Repair Manual	
Volume 1	RM883U1
Volume 2	RM883U2
• 2002 TOYOTA New Car Features	NCF214U

All information in this manual is based on the latest product information at the time of publication. However, specifications and procedures are subject to change without notice.

TOYOTA MOTOR CORPORATION

CAUTION
When repairing the hybrid vehicle (HV), always follow the direction given in the repair manual listed above to prevent electrical shock, leakage or explosion.

NOTICE
When handling supplemental restraint system components (removal, installation or inspection, etc.), always follow the direction given in the repair manuals listed above to prevent accidents and supplemental restraint system malfunction.